Pompe autoadescanti ad anello liquido

Liquid ring self priming pumps

CATALOGO TECNICO

TECHNICAL CATALOGUE

LIVERANI

FLUID TRANSFER TECHNOLOGY

LIVERANI

FLUID TRANSFER TECHNOLOGY

Pompe ad anello liquido, autoadescanti (fino a 6 m) e reversibili, adatte al trasferimento di fluidi chiari, esenti da particelle solide, con viscosità massima 100 cP. Disponibili in acciaio Inox AISI 316 ed in Bronzo. A seconda dei materiali utilizzati, trovano applicazione in diversi settori: settore enologico e oleario (vino, mosto, aceto e olio), settore alimentare (succo di frutta, birra, sciroppi, salamoia, ecc.), settore caseario (latte, siero, ecc.), settore chimico (acidi, solventi, liquidi fotografici, detergenti, inchiostri, ecc.), settore agricolo (anticrittogamici, concimi liquidi, gasolio, ecc.), settore nautico (acqua di mare, acqua dolce, gasolio, ecc.).

Liquid ring pumps, selfpriming (up to 6 m) and reversible, suitable for the transfer of clear liquids, without any solid parts, with max viscosity of 100 cP. The pumps are available both made of Stainless steel AISI 316 and Bronze. According to the construction material the pumps find good applications in several fields: oenological field and food processing (wine, must, vinegar, oil, fruit juice, beer, sirups and brine), dairy field (milk, whey, etc.), chemical field (acids, solvents, photographic liquids, cleaning products, ink, etc.), agriculture field (anticryptogamics, liquid fertilizers, gas oil, etc.), nautic field (sea water, sweet water, gas oil, etc.).

Pompes à anneau liquide auto-amorçantes (jusqu'à 6 m) et réversibles, indiquées pour le transfert de fluides clairs, exempt de particules solides, avec viscosité jusqu'à 100 cP. Disponibles en acier Inox AISI 316 et en Bronze. Selon le materiel utilisé, elles peuvent êtres employées dans de différents secteurs: secteur œnologique et huilier (vin, moût, vinaigre et huile); secteur alimentaire (jus de fruit, bière, sirops, saumure, etc.); secteur fromager (lait, petit-lait, etc.); secteur chimique (acides, solvants, liquides photographiques, détergents, encres,etc.); secteur agricole (produits anticryptogamiques, engrais liquide, gazole, etc.); secteur nautique (eau de mer, eau douce, gazole, etc.).

Flüssigringpumpen, selbstansaugend (bis 6 m) und drehrichtungsumkehrbar, geeignet für die Förderung reiner feststoffreier Flüssigkeiten, mit Viskositäten bis 100 cP. Die Pumpen sind sowohl in Edelstahl als auch in Bronze verfügbar. Entsprechend der Materialausführung finden sich hervorragende Anwendungen in verschiedenen Bereichen wie: Wein-und-Lebensmittelverarbeitung (Wein, Most, Weinessig, Öl, Fruchtsaft, Bier, Sirup, Salzlake), Molkereien (Milch, Molke, usw), Chemie (Säuren, Lösungsmittel, Fotochemie, Reinigungsprodukte, Farbstoffe, usw), Landwirtschaft (Pflanzenschutzmittel, Flüssigdünger, Diesel, usw), Schiffahrt (Salzwasser, Süßwasser, Diesel, usw).

INDICE

Tipologia pompe 4-29
Pompe Special 4
Pompe Special con frizione magnetica 6
Pompe Nautic 8
Pompe Nautic con frizione manuale 10
Pompe MID per motori idraulici 12
Pompe LALX con moltiplicatore 14
Elettropompe in bronzo 16
Elettropompe in acciaio inox AISI 316 20
Pompe in acciaio inox AISI 316 con inverter con comandi bordo quadro 24
Gruppi antideflagranti senza impianto elettrico 26

Tabella raccordi acciaio inox 30

Accessori 31
Carrelli e maniglie per elettropompe 31
Valvola by-pass 31
Interruttore/invertitore - morsettiera 31

Componenti 32

CONTENTS

Pump range 4-29
Special pump type 4
Special pump type with magnetic clutch 6
Nautic pump type 8
Nautic pump type with hand clutch 10
MID pump type for hydraulic motors 12
Lalx pump type with overdrive 14
Bronze electric pumps 16
Stainless steel AISI 316 electric pumps 20
Stainless steel AISI 316 pumps with frequency converter and controls on main panel 24
Explosion proof groups without control panels 26

Stainless steel pipe fittings table 30

Accessories 31
Trolley and handle for electric pumps 31
Bypass valve 31
On-off/reverse switch - terminal board connection 31

Spare parts 32

SPECIAL

POMPE SPECIAL
SPECIAL PUMP TYPE

SPECIAL 20-25-30-40-50

SPECIAL SENIOR 1"1/2-MASTER 2"

Modello Type	Materiale Material	Giri/minuto RPM		kW *	H = Prevalenza (metri) / Head (meters) - Q = Portata (litri/minuto) / Capacity (liters/minute)														
					0	5	10	12	15	18	20	22	24	30	35	40	45	50	H
SPECIAL 20	Bronzo Bronze	standard	2800	0.25	29	20	10	6	0										Q
		max	3300	0.30	36	31	25	22	17	12	8	4	0						
SPECIAL 25	Bronzo Bronze	standard	2800	0.55	60	47	30	23	12	0									
		max	3300	0.75	75	62	47	40	30	18	9	0							
SPECIAL 30	Bronzo Bronze	standard	1400	0.75	75	60	40	30	15	0									
		max	2000	1.10	120	105	85	80	68	55	48	38	30	0					
SPECIAL 40	Bronzo Bronze	standard	1400	1.10	120	105	85	80	62	45	30	0							
		max	2000	1.85	170	150	133	125	110	100	90	80	70	35	0				
SPECIAL 50	Bronzo Bronze	standard	1400	1.85	230	205	175	160	140	120	95	80	60	0					
		max	2000	3.0	300	280	260	250	235	220	210	200	190	150	120	80	40	0	
SPECIAL NEOS 3/4"	Inox AISI 316 S.S. AISI 316	standard	2800	0.25	29	25	18	16	13	8	4	0							
		max	3300	0.30	36	31	25	22	17	12	8	4	0						
SPECIAL SENIOR 1"1/2	Inox AISI 316 S.S. AISI 316	standard	1400	1.10	120	105	85	80	62	45	30	0							
		max	2000	1.85	170	150	133	125	110	100	90	80	70	35	0				
SPECIAL MASTER 2"	Inox AISI 316 S.S. AISI 316	standard	1400	1.85	230	205	175	160	140	120	95	80	60	0					
		max	2000	3.0	300	280	260	250	235	220	210	200	190	150	120	80	40	0	
SPECIAL 60 Inox 2"	Inox AISI 316 S.S. AISI 316	standard	1400	4.0	350	310	265	250	220	190	170	150	130	60	0				
		max	2000	5.5	450	415	375	360	335	315	295	280	260	210	160	110	55	0	

* = Potenza richiesta / Required power

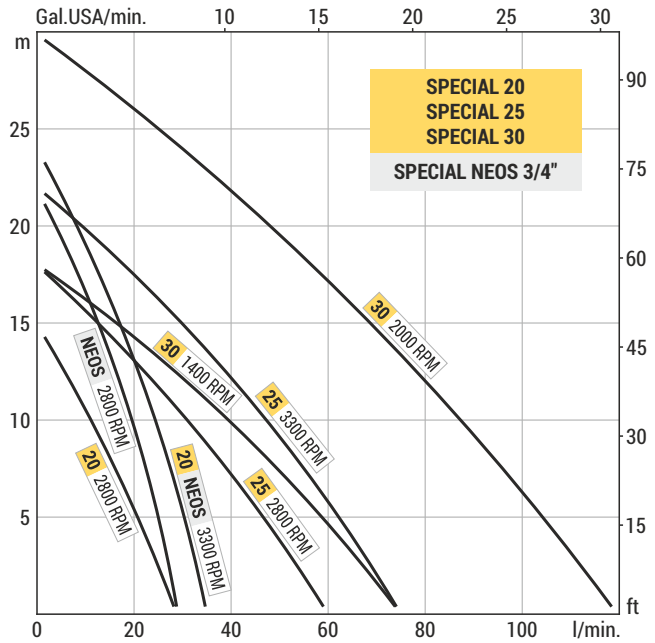

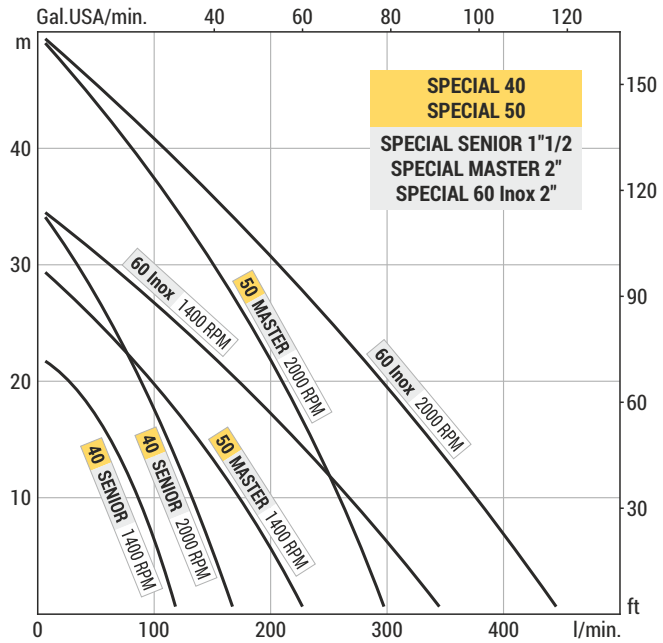

SPECIAL NEOS 3/4"

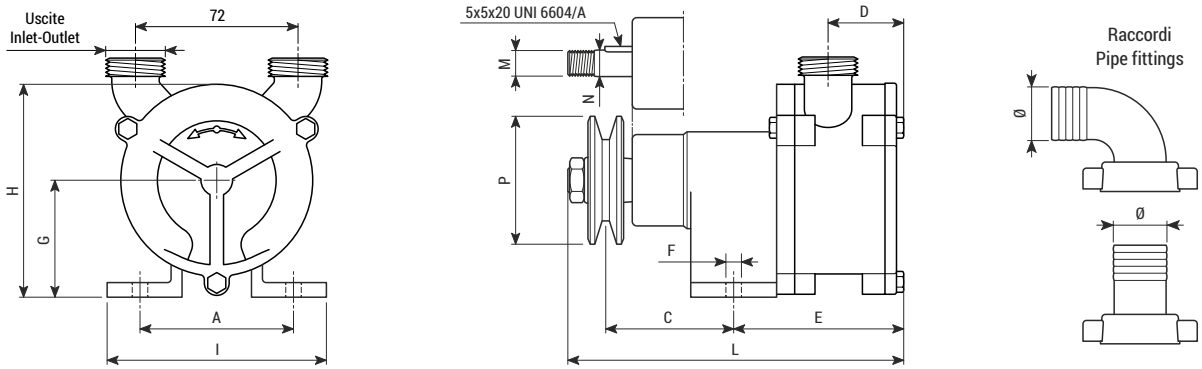

SPECIAL 20-25

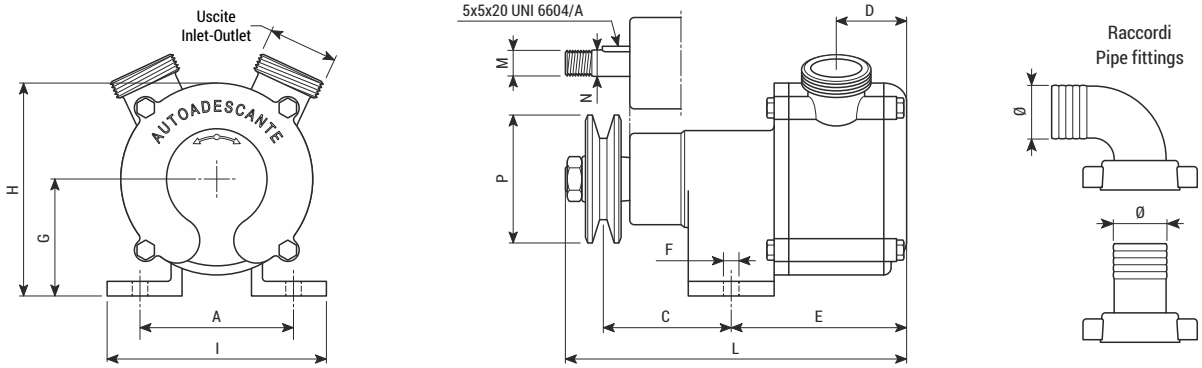

SPECIAL 30-40-50 SENIOR 1"1/2 MASTER 2"

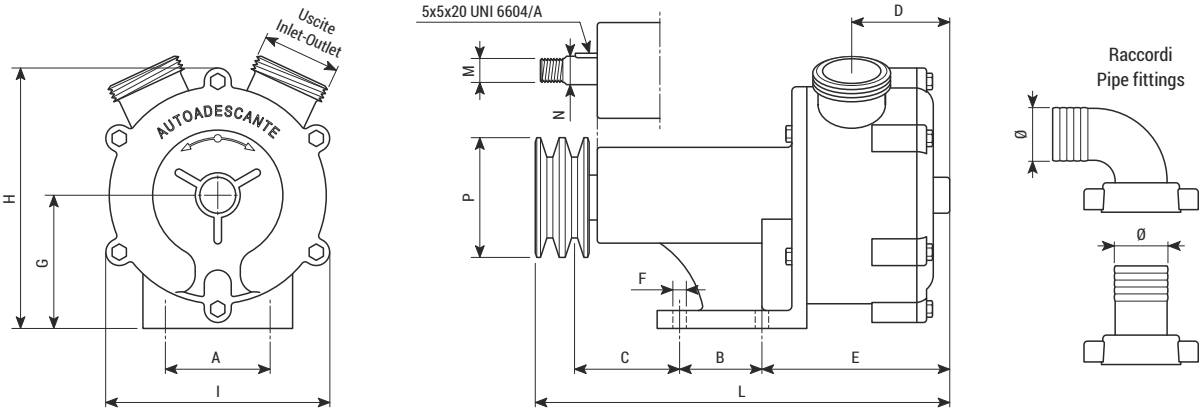

SPECIAL 60 Inox 2"

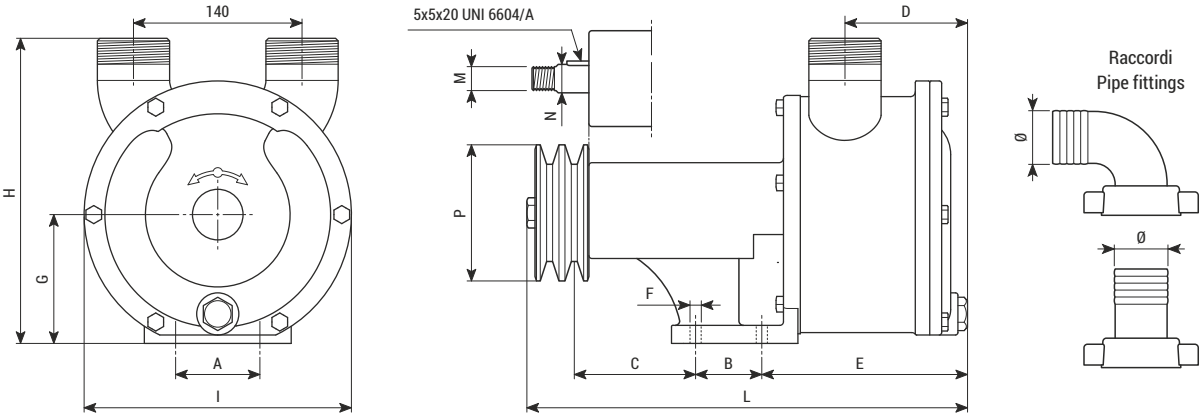

Tipo Type	Peso Weight	Uscite Inlet-Outlet	Raccordi Pipe fittings	Dimensioni (mm) / Dimensions (mm)													
				A	B	C	D	E	F	G	H	I	L	M	N	P	
SPECIAL 20	2.0 kg	BSP-M 3/4"	Ø20	84	-	70	35	81	Ø8.5	58	100	120	172	M14x1.5	Ø14.5	Ø70x1A	rif. UNI 5266
SPECIAL 25	2.8 kg	BSP-M 1"	Ø25	84	-	70	40	98	Ø8.5	56	108	120	190	M14x1.5	Ø14.5	Ø70x1A	
SPECIAL 30	5.6 kg	BSP-M 1"1/4	Ø30	70	55	64	50	103	Ø8.5	89	175	150	254	M16	Ø19	Ø70x1A	
SPECIAL 40	7.3 kg	BSP-M 1"1/2	Ø40	70	55	64	67	128	Ø8.5	89	175	150	277	M16	Ø19	Ø80x2A	
SPECIAL 50	12.5 kg	BSP-M 2"	Ø50	70	55	90	90	160	Ø9	107	210	185	330	M16	Ø19	Ø80x2A	
SPECIAL NEOS 3/4"	1.8 kg	BSP-M 3/4" *	Ø20 **	84	-	70	34	80	Ø8.5	58	100	120	171	M14x1.5	Ø14.5	Ø70x1A	
SPECIAL SENIOR 1"1/2	7.4 kg	BSP-M 1"1/2 *	Ø40 **	70	55	64	76	138	Ø8.5	89	175	167	287	M16	Ø19	Ø80x2A	
SPECIAL MASTER 2"	12.6 kg	BSP-M 2" *	Ø50 **	70	55	90	94	160	Ø9	107	210	205	330	M16	Ø19	Ø80x2A	
SPECIAL 60 Inox 2"	16.0 kg	BSP-M 2" *	Ø50 **	70	55	83.5	102	171	Ø9	107	258	222	349	M16	Ø19	Ø149x2B	

* = Uscite standard BSP (Gas), altre uscite disponibili p.30 / Standard inlet-outlet BSP (Gas), different inlet-outlet are available see p.30

** = Raccordi in acciaio inox o nylon a richiesta / Stainless steel or nylon pipe fittings on request

SPECIAL FM
NAUTIC FM

POMPE SPECIAL-NAUTIC CON FRIZIONE MAGNETICA 12V/24V
SPECIAL-NAUTIC PUMP WITH MAGNETIC CLUTCH 12V/24V

SPECIAL 30-40-50 FM

SPECIAL SENIOR 1"1/2 FM
SPECIAL MASTER 2" FM

NAUTIC 70 FM

Modello ** Type **	Materiale Material	Giri/minuto RPM		kW *	H = Prevalenza (metri) / Head (meters) - Q = Portata (litri/minuto) / Capacity (liters/minute)														
					0	5	10	15	18	22	24	30	35	40	50	55	60	65	H
SPECIAL 30 FM	Bronzo Bronze	standard	1400	0.75	75	60	40	15	0										Q
		max	2000	1.10	120	105	85	68	55	38	30	0							
SPECIAL 40 FM	Bronzo Bronze	standard	1400	1.10	120	105	85	62	45	0									
		max	2000	1.85	170	150	133	110	100	80	70	35	0						
SPECIAL 50 FM	Bronzo Bronze	standard	1400	1.85	230	205	175	140	120	80	60	0							
		max	2000	3.0	300	280	260	235	220	200	190	150	120	80	0				
NAUTIC 70 FM	Bronzo Bronze	standard	1400	7.5	500	455	415	365	330	280	255	165	90	0					
		max	2000	11.0	590	555	520	485	460	430	410	375	320	255	140	70	0		
SPECIAL SENIOR 1"1/2 FM	Inox AISI 316 S.S. AISI 316	standard	1400	1.10	120	105	85	62	45	0									
		max	2000	1.85	170	150	133	110	100	80	70	35	0						
SPECIAL MASTER 2" FM	Inox AISI 316 S.S. AISI 316	standard	1400	1.85	230	205	175	140	120	80	60	0							
		max	2000	3.0	300	280	260	235	220	200	190	150	120	80	0				
SPECIAL 60 Inox 2" FM	Inox AISI 316 S.S. AISI 316	standard	1400	4.0	350	310	265	220	190	150	130	60	0						
		max	2000	5.5	450	415	375	335	315	280	260	210	160	110	0				
NAUTIC 70 Inox FM	Inox AISI 316 S.S. AISI 316	standard	1400	7.5	500	455	415	365	330	280	255	165	90	0					
		max	2000	11.0	590	555	520	485	460	430	410	375	320	255	140	70	0		
NAUTIC 80 Inox FM	Inox AISI 316 S.S. AISI 316	standard	1400	15.0	900	840	780	720	660	620	580	500	410	310	110	0			
		max	2000	22.5	1000	940	875	810	770	720	690	600	530	450	280	190	100	0	

* = Potenza richiesta / Required power
** = Disponibile con frizione magnetica 12V o 24V / Available with magnetic clutch 12V or 24V

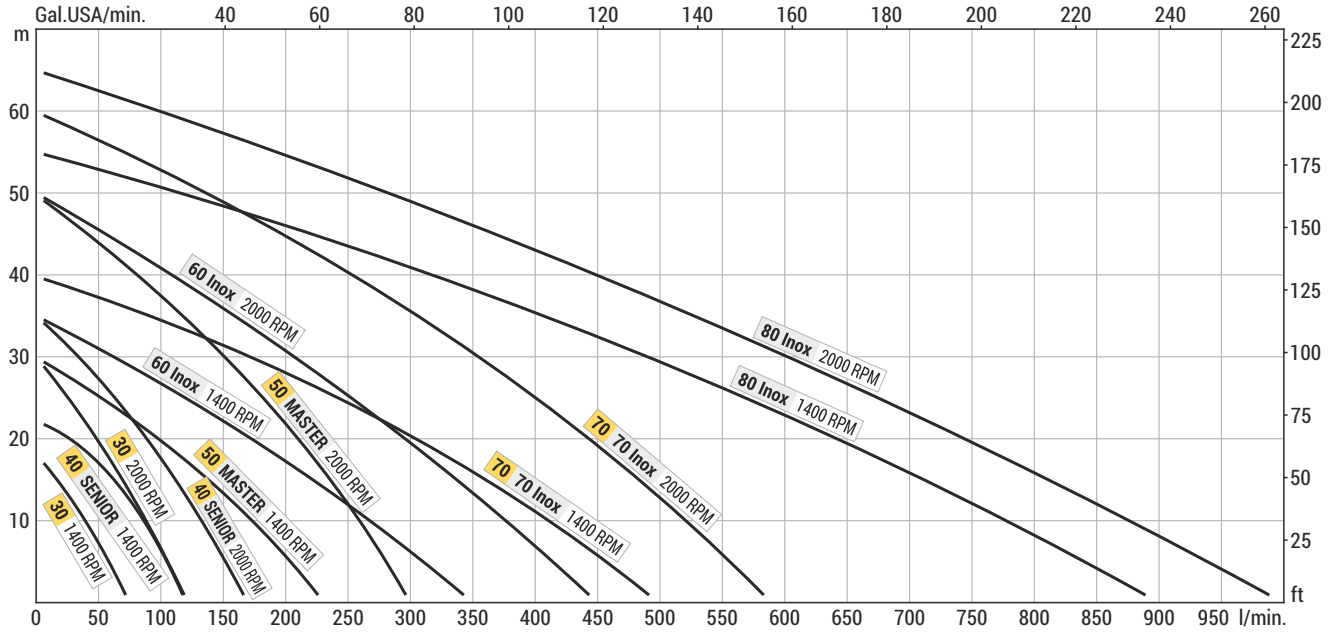

SPECIAL
30-40-50 FM
SENIOR 1"1/2 FM
MASTER 2" FM

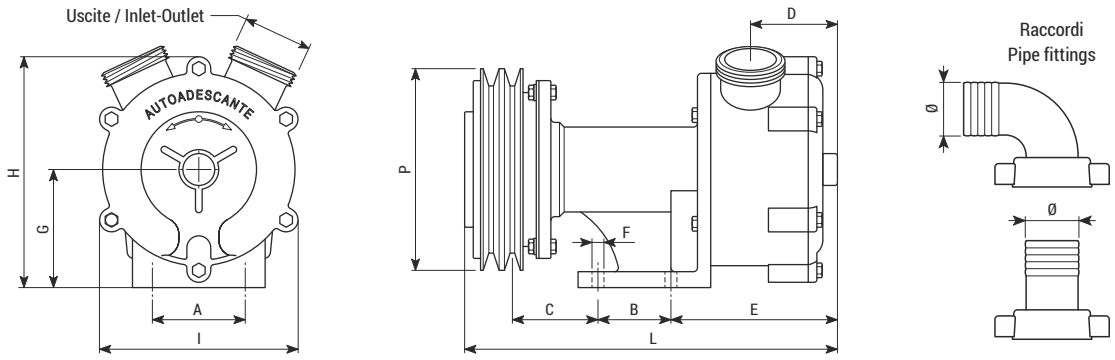

SPECIAL
60 Inox FM

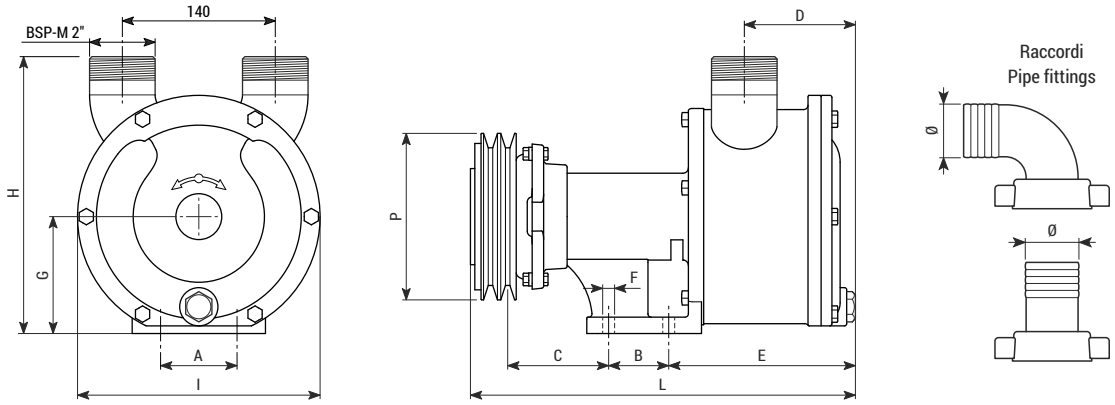

NAUTIC
70 FM
70 Inox FM

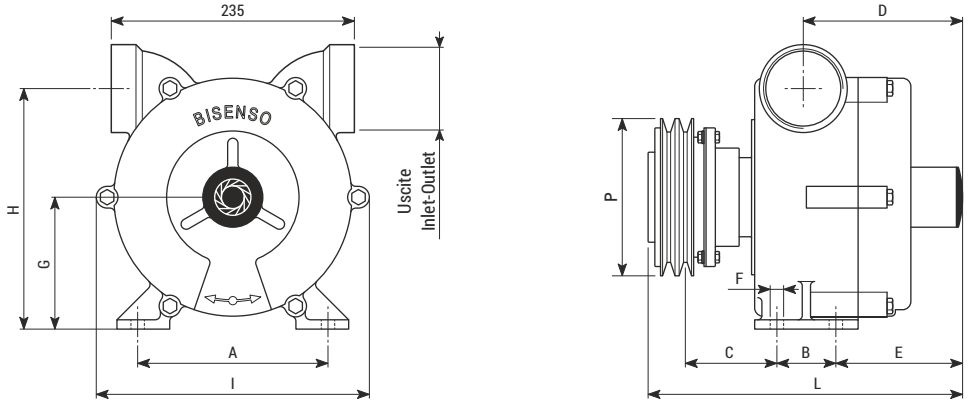

NAUTIC
80 Inox FM

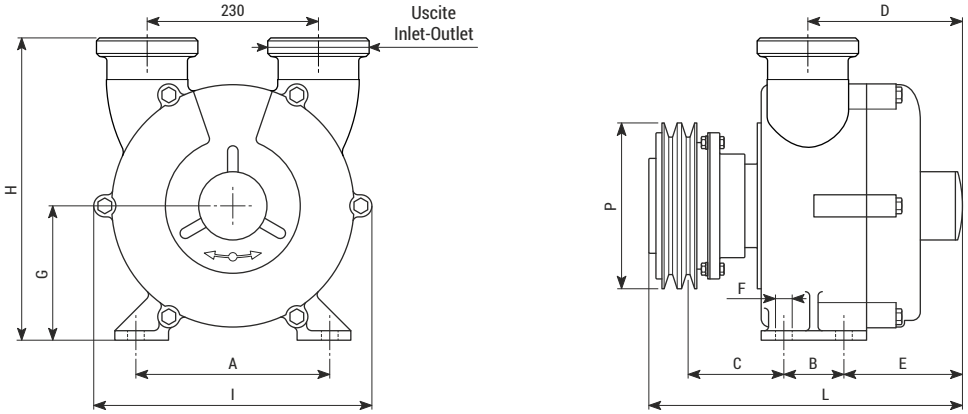

Tipo Type	Peso Weight	Uscite Inlet-Outlet	Raccordi Pipe fittings	Dimensioni (mm) / Dimensions (mm)											
				A	B	C	D	E	F	G	H	I	L	P	
SPECIAL 30 FM	9.8 kg	BSP-M 1"1/4	Ø30	70	55	68	50	103	Ø8,5	89	175	150	265	Ø152x2A	rif. UNI 5266
SPECIAL 40 FM	10.3 kg	BSP-M 1"1/2	Ø40	70	55	68	67	128	Ø8,5	89	175	150	288	Ø152x2A	
SPECIAL 50 FM	16.1 kg	BSP-M 2"	Ø50	70	55	94	90	160	Ø9	107	210	185	345	Ø152x2A	
NAUTIC 70 FM	29.8 kg	BSP-F 2"1/2	n.d.	184	57	89	144	110	Ø13	128	231	185	286	Ø152x2A	
SPECIAL SENIOR 1"1/2 FM	10.4 kg	BSP-M 1"1/2 *	Ø40 **	70	55	68	76	138	Ø8,5	89	175	167	298	Ø152x2A	
SPECIAL MASTER 2" FM	16.2 kg	BSP-M 2" *	Ø50 **	70	55	94	94	160	Ø9	107	210	205	345	Ø152x2A	
SPECIAL 60 Inox 2" FM	21.4 kg	BSP-M 2" *	Ø50 **	70	55	94	102	171	Ø9	107	258	222	356	Ø152x2A	
NAUTIC 70 Inox FM	28.8 kg	BSP-M 2"1/2	n.d.	184	57	89	144	110	Ø13	128	231	185	286	Ø152x2A	
NAUTIC 80 Inox FM	40.0 kg	Garolla 80	n.d.	250	60	89	181	144	Ø13	160	327	315	286	Ø152x2A	

* = Uscite standard BSP (Gas), altre uscite disponibili p.30 / Standard inlet-outlet BSP (Gas), different inlet-outlet are available see p.30
** = Raccordi in acciaio inox o nylon a richiesta / Stainless steel or nylon pipe fittings on request
n.d. = Raccordi non disponibili / Pipe fittings not available

NAUTIC

POMPE NAUTIC
NAUTIC PUMP TYPE

NAUTIC 25-30-40-50

NAUTIC 70

NAUTIC 80 Inox

Modello Type	Materiale Material	Giri/minuto RPM		kW *	H = Prevalenza (metri) / Head (meters) - Q = Portata (litri/minuto) / Capacity (liters/minute)														
					0	5	10	15	18	22	24	30	35	40	50	55	60	65	H
NAUTIC 25	Bronzo Bronze	standard	2800	0.55	60	47	30	12	0										Q
		max	3300	0.75	75	62	47	30	18	0									
NAUTIC 30	Bronzo Bronze	standard	1400	0.75	75	60	40	15	0										
		max	2000	1.10	120	105	85	68	55	38	30	0							
NAUTIC 40	Bronzo Bronze	standard	1400	1.10	120	105	85	62	45	0									
		max	2000	1.85	170	150	133	110	100	80	70	35	0						
NAUTIC 50	Bronzo Bronze	standard	1400	1.85	230	205	175	140	120	80	60	0							
		max	2000	3.0	300	280	260	235	220	200	190	150	120	80	0				
NAUTIC 70	Bronzo Bronze	standard	1400	7.5	500	455	415	365	330	280	255	165	90	0					
		max	2000	11.0	590	555	520	485	460	430	410	375	320	255	140	70	0		
NAUTIC 70 Inox	Inox AISI 316 S.S. AISI 316	standard	1400	7.5	500	455	415	365	330	280	255	165	90	0					
		max	2000	11.0	590	555	520	485	460	430	410	375	320	255	140	70	0		
NAUTIC 80 Inox	Inox AISI 316 S.S. AISI 316	standard	1400	15.0	900	840	780	720	660	620	580	500	410	310	110	0			
		max	2000	22.5	1000	940	875	810	770	720	690	600	530	450	280	190	100	0	

* = Potenza richiesta / Required power

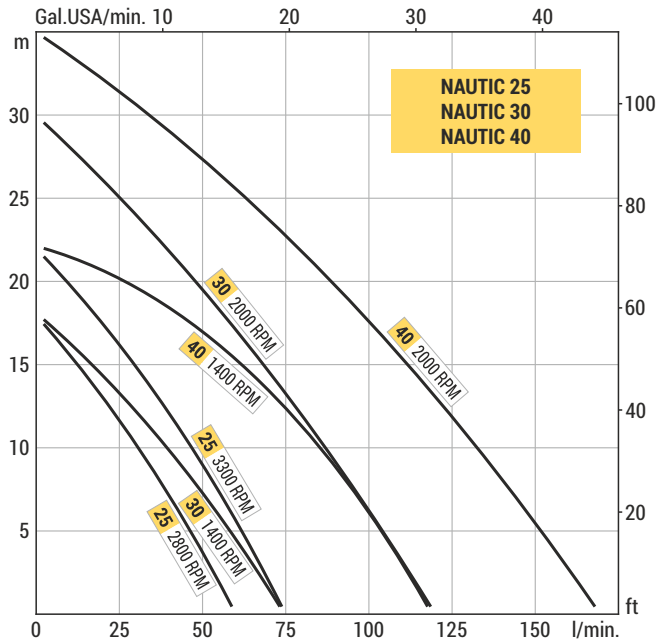

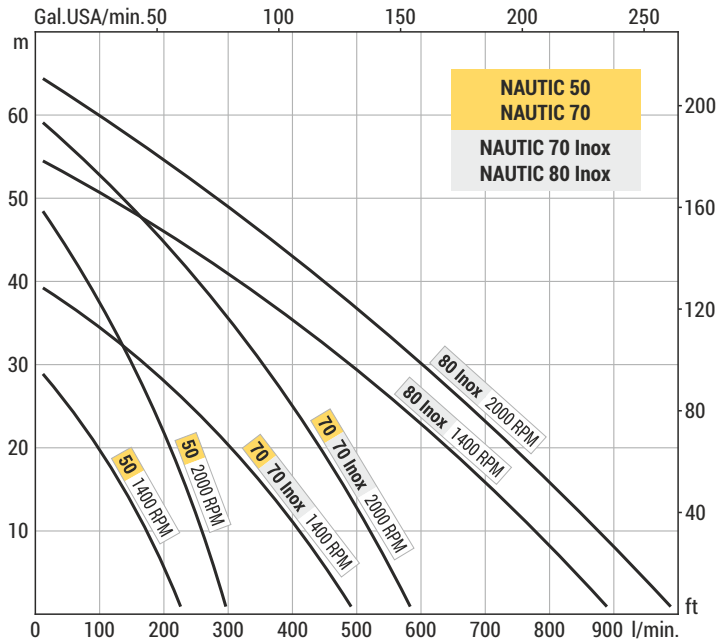

NAUTIC 25-30-40-50

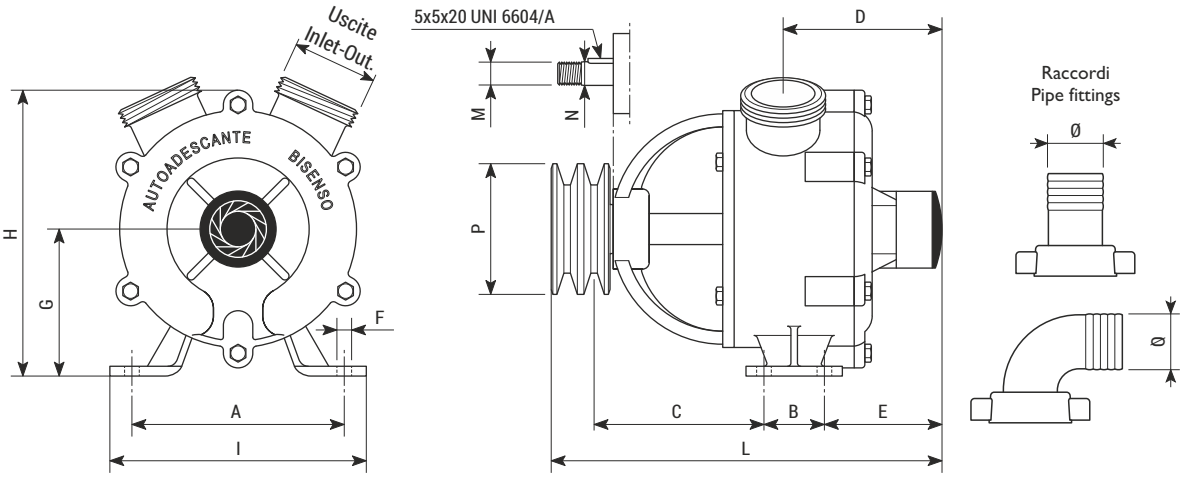

NAUTIC 70
NAUTIC 70 Inox

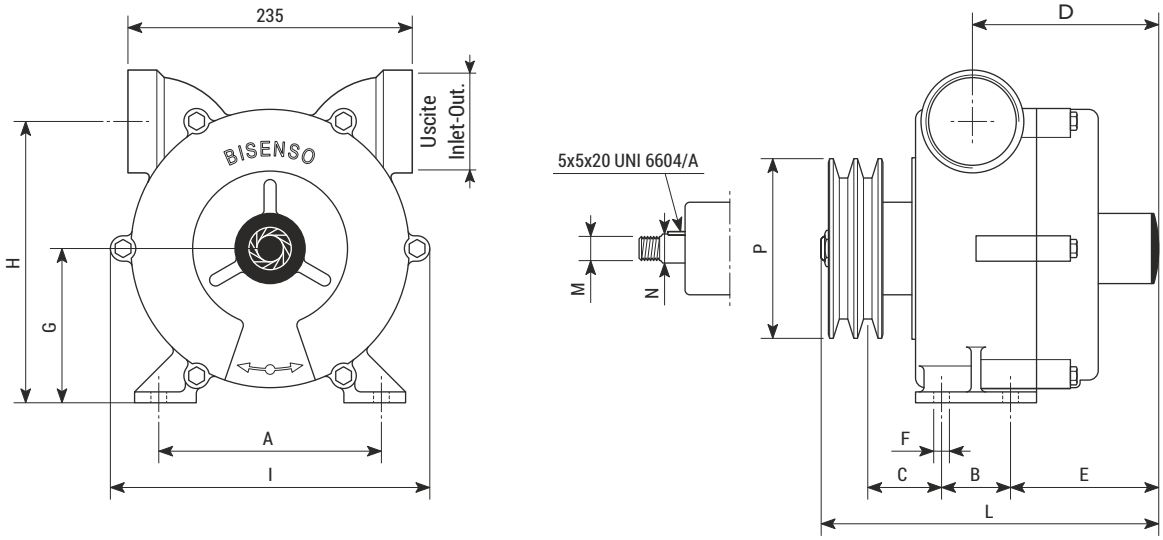

NAUTIC 80 Inox

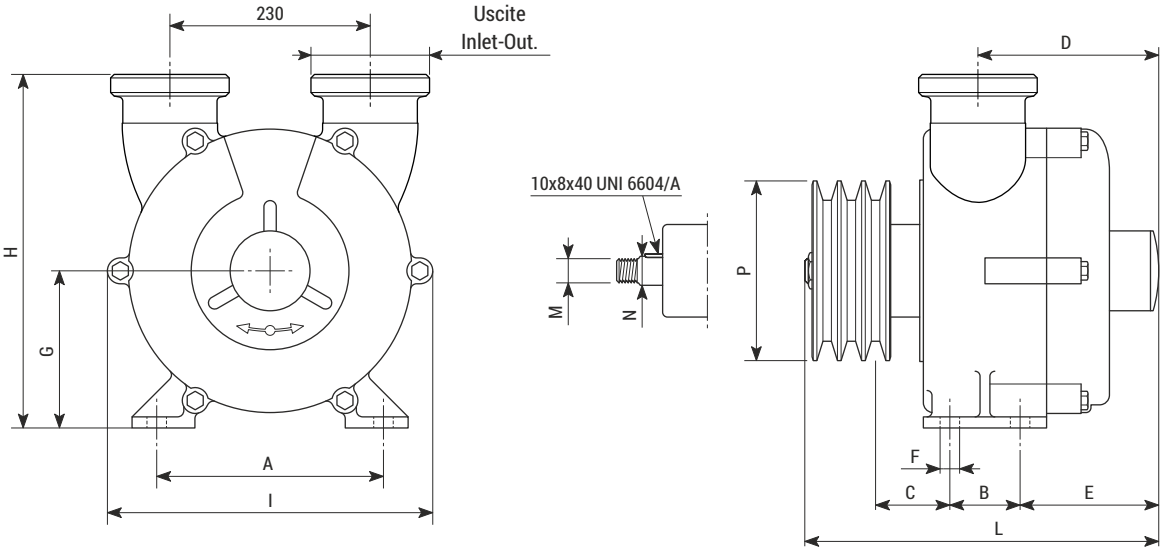

Tipo Type	Peso Weight	Uscite Inlet-Outlet	Raccordi Pipe fittings	Dimensioni (mm) / Dimensions (mm)													
				A	B	C	D	E	F	G	H	I	L	M	N	P	
NAUTIC 25	4.1 kg	BSP-M 1"	Ø25	119,5	25	80	80	68	Ø6,75	63	116	140	195	M14x1,5	Ø14,5	Ø70x1A	rif. UNI 5266
NAUTIC 30	5.7 kg	BSP-M 1"1/4	Ø30	130	28	103	85	70	Ø9	90	175	157	218	M14x1,5	Ø14,5	Ø70x1A	
NAUTIC 40	7.4 kg	BSP-M 1"1/2	Ø40	130	37	108	105	76	Ø9	90	175	157	245	M14x1,5	Ø14,5	Ø80x2A	
NAUTIC 50	12.8 kg	BSP-M 2"	Ø50	160	40	138	125	91	Ø11	120	225	188	298	M16	Ø19	Ø80x2A	
NAUTIC 70	25.3 kg	BSP-F 2"1/2	n.d.	184	57	64	144	110	Ø13	128	231	260	269	M18x1,5	Ø24	Ø149x2B	
NAUTIC 70 Inox	25.3 kg	BSP-M 2"1/2 *	n.d.	184	57	64	144	110	Ø13	128	231	260	269	M18x1,5	Ø24	Ø149x2B	
NAUTIC 80 Inox	40.0 kg	Garolla 80	n.d.	250	60	65	181	144	Ø13	160	327	315	330	M20x1,5	Ø30	Ø167x3B	

* = Uscite standard BSP (Gas), altre uscite disponibili p.30 / Standard inlet-outlet BSP (Gas), different inlet-outlet are available see p.30
n.d. = Raccordi non disponibili / Pipe fittings not available

NAUTIC F

POMPE NAUTIC CON FRIZIONE MANUALE
NAUTIC PUMP TYPE WITH HAND CLUTCH

NAUTIC 30-40-50 F

NAUTIC 70 F

NAUTIC 80 Inox F

Modello Type	Materiale Material	Giri/minuto RPM		kW *	H = Prevalenza (metri) / Head (meters) - Q = Portata (litri/minuto) / Capacity (liters/minute)														
					0	5	10	15	18	22	24	30	35	40	50	55	60	65	H
NAUTIC 30 F	Bronzo Bronze	standard	1400	0.75	75	60	40	15	0										
		max	2000	1.10	120	105	85	68	55	38	30	0							
NAUTIC 40 F	Bronzo Bronze	standard	1400	1.10	120	105	85	62	45	0									
		max	2000	1.85	170	150	133	110	100	80	70	35	0						
NAUTIC 50 F	Bronzo Bronze	standard	1400	1.85	230	205	175	140	120	80	60	0							
		max	2000	3.0	300	280	260	235	220	200	190	150	120	80	0				
NAUTIC 70 F	Bronzo Bronze	standard	1400	7.5	500	455	415	365	330	280	255	165	90	0					Q
		max	2000	11.0	590	555	520	485	460	430	410	375	320	255	140	70	0		
NAUTIC 70 Inox F	Inox AISI 316 S.S. AISI 316	standard	1400	7.5	500	455	415	365	330	280	255	165	90	0					
		max	2000	11.0	590	555	520	485	460	430	410	375	320	255	140	70	0		
NAUTIC 80 Inox F	Inox AISI 316 S.S. AISI 316	standard	1400	15.0	900	840	780	720	660	620	580	500	410	310	110	0			
		max	2000	22.5	1000	940	875	810	770	720	690	600	530	450	280	190	100	0	

* = Potenza richiesta / Required power

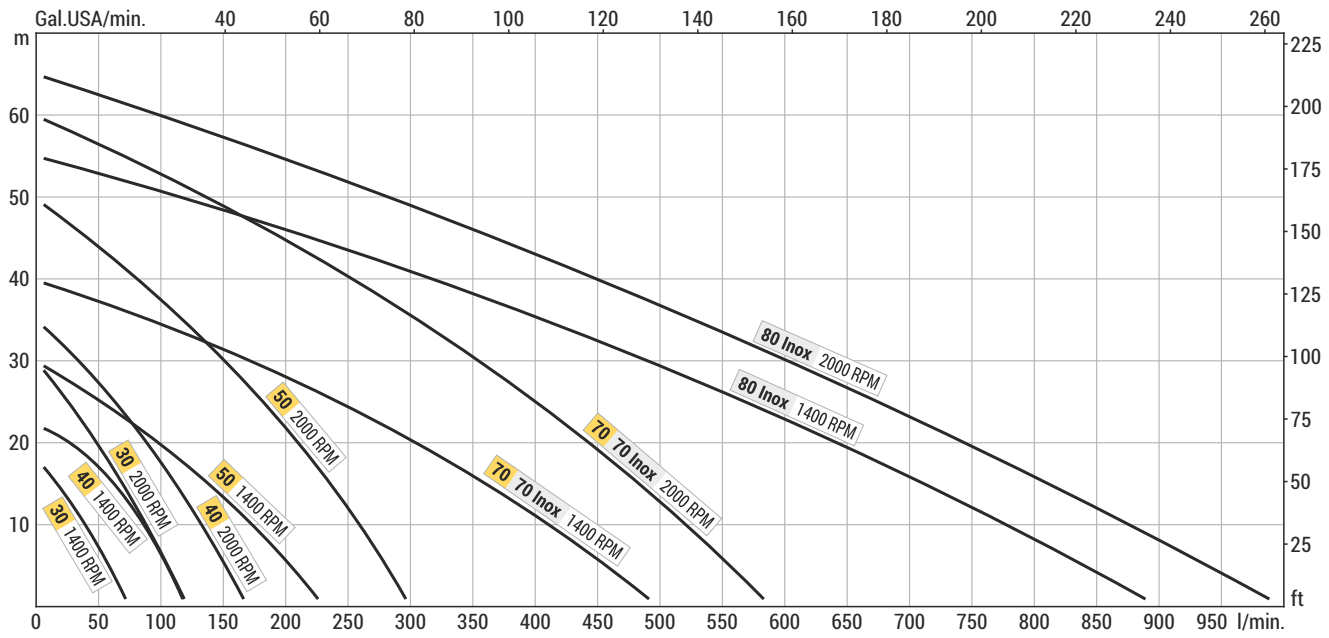

NAUTIC 30-40-50 F

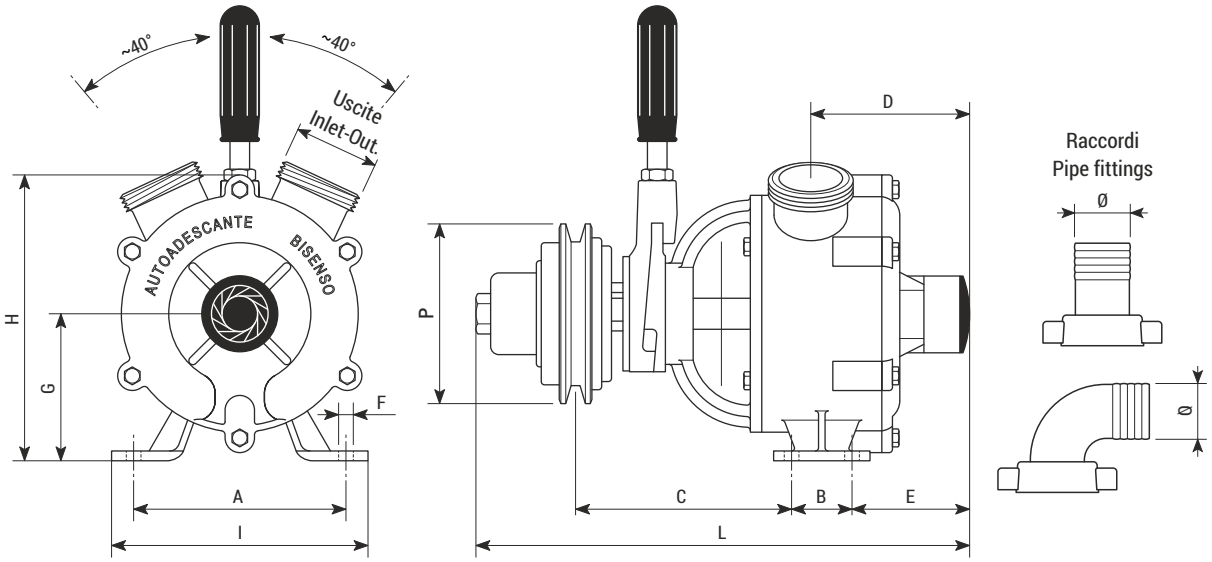

NAUTIC 70 F
NAUTIC 70 Inox F

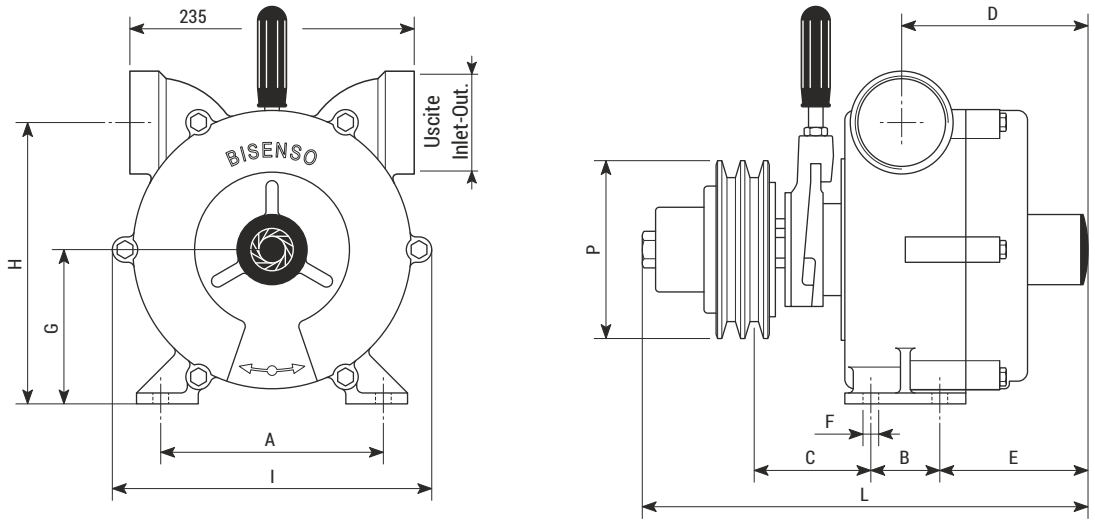

NAUTIC 80 Inox F

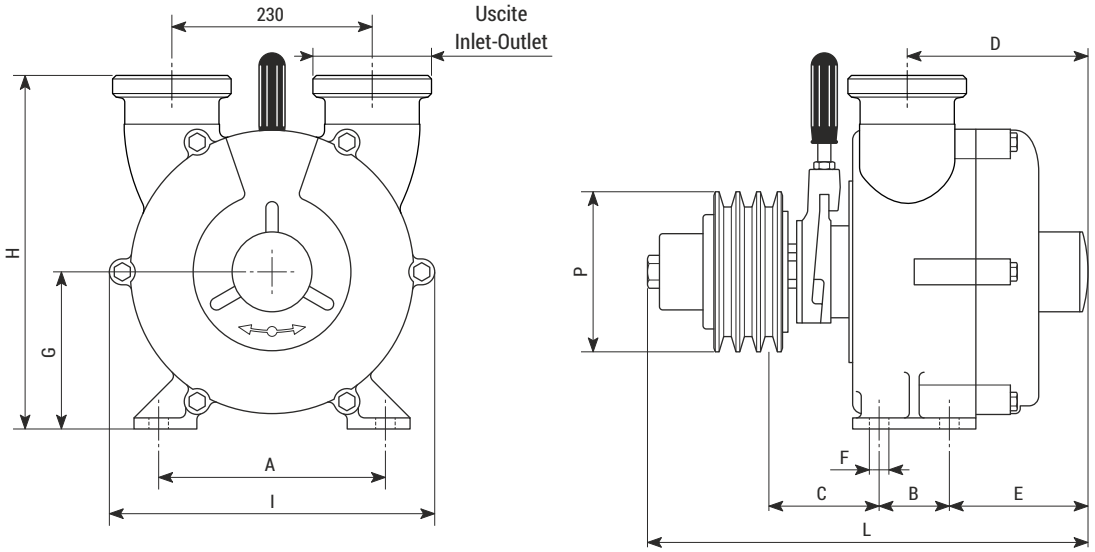

Tipo Type	Peso Weight	Uscite Inlet-Outlet	Raccordi Pipe fittings	Dimensioni (mm) / Dimensions (mm)											
				A	B	C	D	E	F	G	H	I	L	P	
NAUTIC 30 F	8.8 kg	BSP-M 1"1/4	Ø30	130	28	124	85	70	Ø9	90	175	157	280	Ø110x1A	rif. UNI 5266
NAUTIC 40 F	10.5 kg	BSP-M 1"1/2	Ø40	130	37	130	105	76	Ø9	90	175	157	305	Ø110x1A	
NAUTIC 50 F	15.6 kg	BSP-M 2"	Ø50	160	40	160	125	91	Ø11	120	225	188	365	Ø110x2A	
NAUTIC 70 F	28.9 kg	BSP-F 2"1/2	n.d.	184	57	97	144	110	Ø13	128	231	260	355	Ø147x2B	
NAUTIC 70 Inox F	28.9 kg	BSP-M 2"1/2 *	n.d.	184	57	97	144	110	Ø13	128	231	260	355	Ø147x2B	
NAUTIC 80 Inox F	42.0 kg	Garolla 80	n.d.	250	60	110	181	144	Ø13	160	327	315	428	Ø167x3B	

* = Uscite standard BSP (Gas), altre uscite disponibili p.30 / Standard inlet-outlet BSP (Gas), different inlet-outlet are available see p.30
n.d. = Raccordi non disponibili / Pipe fittings not available

MID

POMPE MID PER MOTORE IDRAULICO
MID PUMP TYPE FOR HYDRAULIC MOTOR

MID 40-50

MID 70 Inox

MID MASTER 2"

MID 80 Inox

Modello Type	Materiale Material	Giri/minuto RPM		kW *	H = Prevalenza (metri) / Head (meters) - Q = Portata (litri/minuto) / Capacity (liters/minute)														
					0	5	10	15	18	22	24	30	35	40	50	55	60	65	H
MID 40	Bronzo Bronze	standard	1400	1.10	120	105	85	62	45	0									Q
		max	2000	1.85	170	150	133	110	100	80	70	35	0						
MID 50	Bronzo Bronze	standard	1400	1.85	230	205	175	140	120	80	60	0							
		max	2000	3.0	300	280	260	235	220	200	190	150	120	80	0				
MID 70	Bronzo Bronze	standard	1400	7.5	500	455	415	365	330	280	255	165	90	0					
		max	2000	11.0	590	555	520	485	460	430	410	375	320	255	140	70	0		
MID MASTER 2"	Inox AISI 316 S.S. AISI 316	standard	1400	1.85	230	205	175	140	120	80	60	0							
		max	2000	3.0	300	280	260	235	220	200	190	150	120	80	0				
MID 60 Inox 2"	Inox AISI 316 S.S. AISI 316	standard	1400	4.0	350	310	265	220	190	150	130	60	0						
		max	2000	5.5	450	415	375	335	315	280	260	210	160	110	0				
MID 70 Inox	Inox AISI 316 S.S. AISI 316	standard	1400	7.5	500	455	415	365	330	280	255	165	90	0					
		max	2000	11.0	590	555	520	485	460	430	410	375	320	255	140	70	0		
MID 80 Inox	Inox AISI 316 S.S. AISI 316	standard	1400	15.0	900	840	780	720	660	620	580	500	410	310	110	0			
		max	2000	22.5	1000	940	875	810	770	720	690	600	530	450	280	190	100	0	

* = Potenza richiesta / Required power

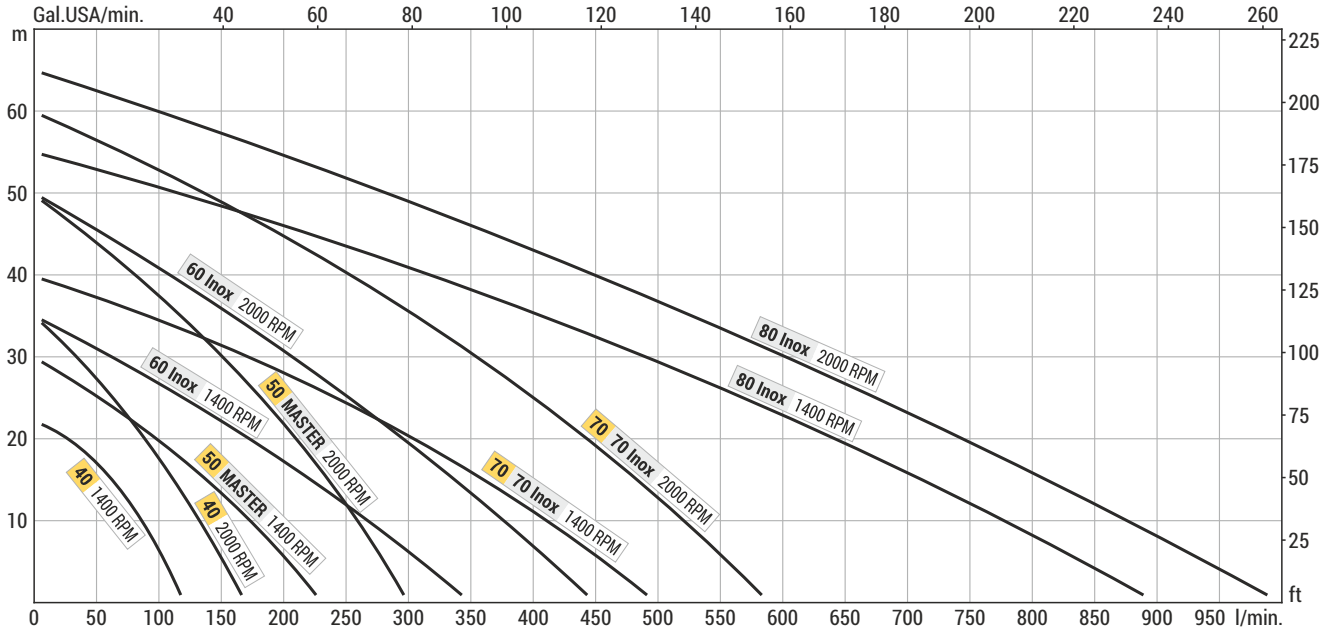

MID 40-50
MID MASTER 2”

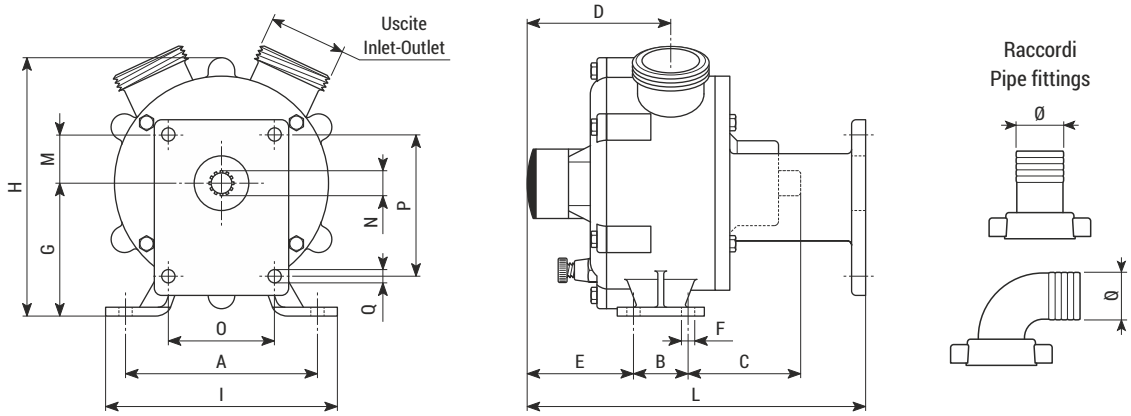

MID 60 Inox 2"

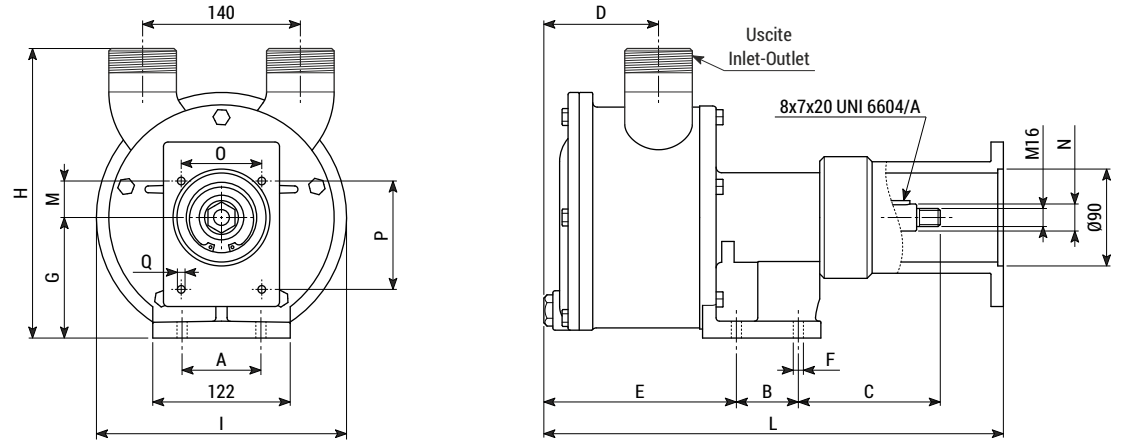

MID 70
MID 70 Inox

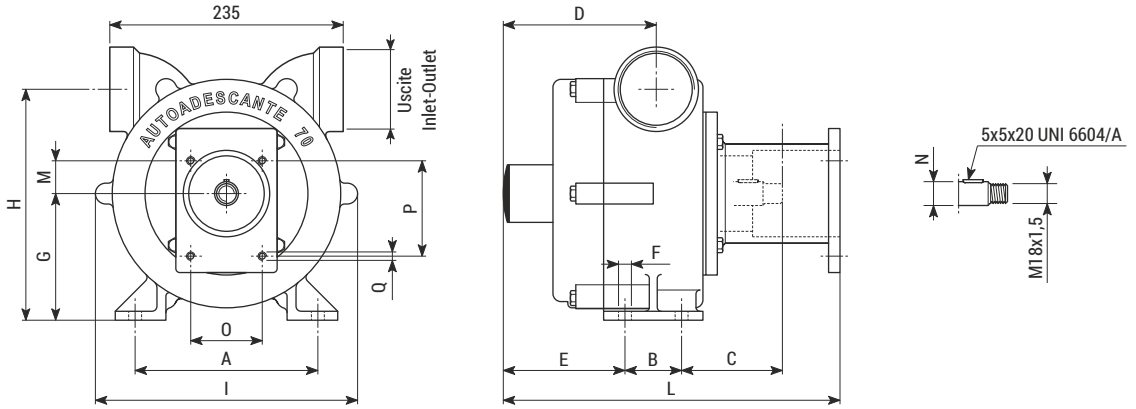

MID 80 Inox

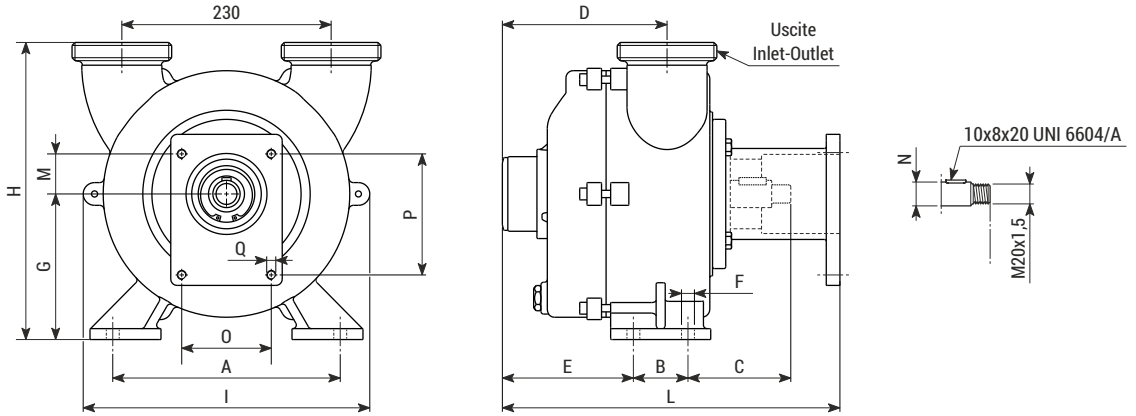

Tipo Type	Peso Weight	Uscite Inlet-Outlet	Raccordi Pipe fittings	Dimensioni (mm) / Dimensions (mm)														
				A	B	C	D	E	F	G	H	I	L	M	N	O	P	Q
MID 40	7.2 kg	BSP-M 1"1/2	Ø40	130	37	78	105	76	Ø9	90	175	157	235	33	Ø16,8 - z14	72	96	Ø9
MID 50	11.4 kg	BSP-M 2"	Ø50	160	40	84	125	91	Ø11	120	225	188	265	33	Ø19,8 - z17	72	96	Ø9
MID 70	25.5 kg	BSP-F 2"1/2	n.d.	184	57	102	144	110	Ø13	128	231	260	330	33	Ø24	72	96	M8
MID MASTER 2”	11.3 kg	BSP-M 2" *	Ø50 **	160	40	85	125	91	Ø11	120	225	188	270	33	Ø19,8 - z17	72	96	Ø9
MID 60 Inox 2"	14.9 kg	BSP-M 2" *	Ø50 **	70	55	123	102	171	Ø9	107	258	222	409	33	Ø24	72	96	M8
MID 70 Inox	21.4 kg	BSP-F 2"1/2 *	n.d.	184	57	102	144	110	Ø13	128	231	260	330	33	Ø24	72	96	M8
MID 80 Inox	40.0 kg	Garolla 80	n.d.	250	60	113	181	144	Ø13	160	327	315	371	44	Ø30	98.4	133	M10

* = Uscite standard BSP (Gas), altre uscite disponibili p.30 / Standard inlet-outlet BSP (Gas), different inlet-outlet are available see p.30
** = Raccordi in acciaio inox o nylon a richiesta / Stainless steel or nylon pipe fittings on request
n.d. = Raccordi non disponibili / Pipe fittings not available

POMPE LALX CON MOLTIPLICATORE
LALX PUMP TYPE WITH OVERDRIVE

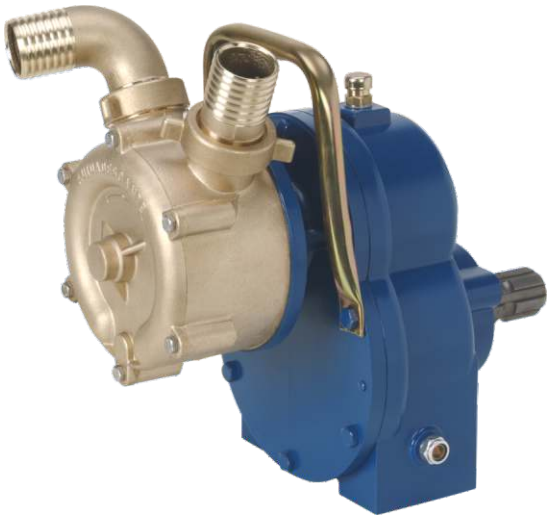

LALX 40-50

LALX SENIOR 1"1/2-MASTER 2"

Modello ** Type **	Materiale Material	Giri/minuto RPM		kW *	H = Prevalenza (metri) / Head (meters) - Q = Portata (litri/minuto) / Capacity (liters/minute)														
					0	5	10	12	15	18	20	22	24	30	35	40	45	50	H
LALX 40	Bronzo Bronze	standard	1400	1.10	120	105	85	80	62	45	30	0							Q
		max	2000	1.85	170	150	133	125	110	100	90	80	70	35	0				
LALX 50	Bronzo Bronze	standard	1400	1.85	230	205	175	160	140	120	95	80	60	0					
		max	2000	3.0	300	280	260	250	235	220	210	200	190	150	120	80	40	0	
LALX SENIOR 1"1/2	Inox AISI 316 S.S. AISI 316	standard	1400	1.10	120	105	85	80	62	45	30	0							
		max	2000	1.85	170	150	133	125	110	100	90	80	70	35	0				
LALX MASTER 2"	Inox AISI 316 S.S. AISI 316	standard	1400	1.85	230	205	175	160	140	120	95	80	60	0					
		max	2000	3.0	300	280	260	250	235	220	210	200	190	150	120	80	40	0	

* = Potenza richiesta / Required power
** = Versione standard: moltiplicatore rapporto 7.1 / Standard version: overdrive rate 7.1
** = Versione speciale: moltiplicatore rapporto 3.7 / Special version: overdrive rate 3.7

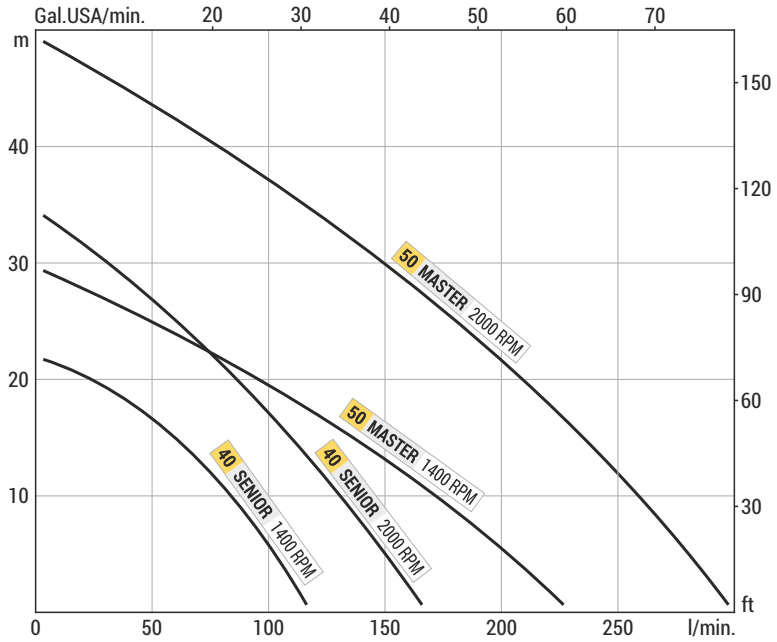

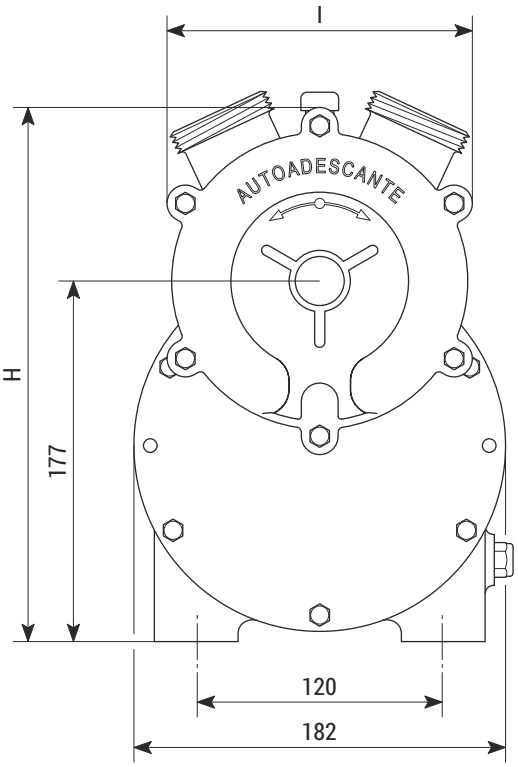

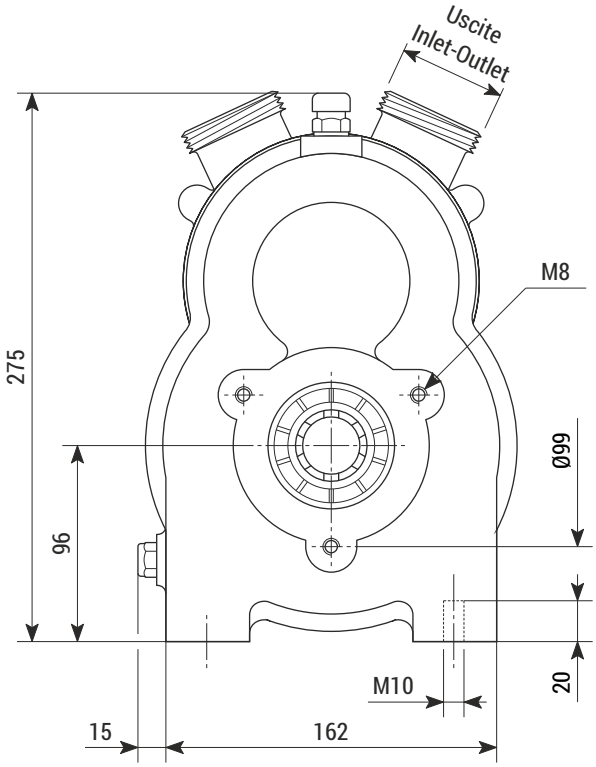

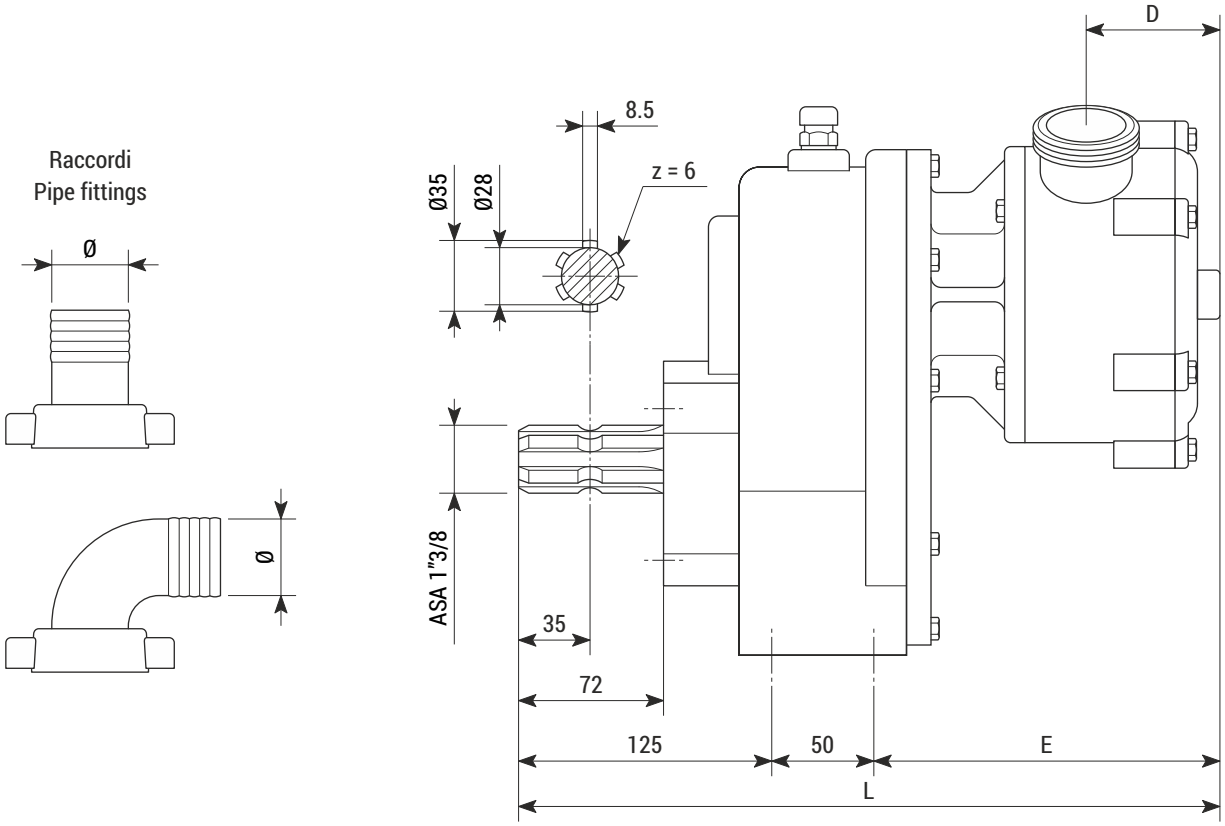

Tipo Type	Peso Weight	Uscite Inlet-Outlet	Raccordi Pipe fittings	Dimensioni (mm) / Dimensions (mm)				
				D	E	H	I	L
LALX 40	16.5 kg	BSP-M 1"1/2	Ø40	67	171	86	150	346
LALX 50	20.2 kg	BSP-M 2"	Ø50	90	203	103	185	378
LALX SENIOR 1"1/2	16.4 kg	BSP-M 1"1/2 *	Ø40 **	76	181	86	167	356
LALX MASTER 2"	20.1 kg	BSP-F 2" *	Ø50 **	94	208	103	205	383

* = Uscite standard BSP (Gas), altre uscite disponibili p.30 / Standard inlet-outlet BSP (Gas), different inlet-outlet are available see p.30
** = Raccordi in acciaio inox o nylon a richiesta / Stainless steel or nylon pipe fittings on request

EP

ELETTROPOMPE IN BRONZO
BRONZE ELECTRIC PUMPS

EP 70

EPH 20-25 MF
EP 20-25-30-40-50 MF/TF

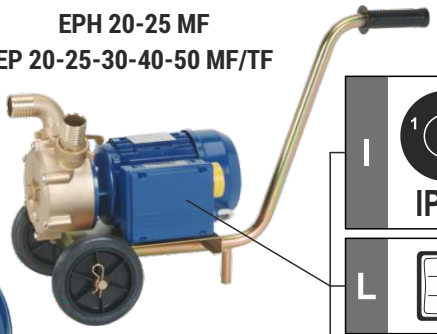

EP 20-25-30-40-50 CC

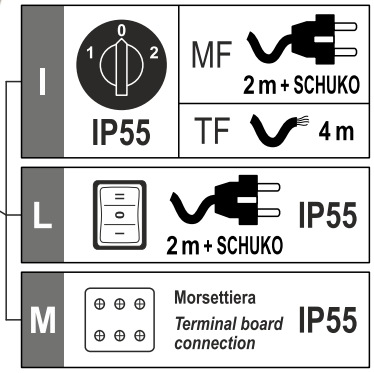

ELETTROPOMPE MONOFASE (MF) O TRIFASE (TF) - **50 Hz** / SINGLE-PHASE (MF) OR THREE PHASE (TF) ELECTRIC PUMPS - **50 Hz**																			
Modello Type	Maniglia Handle	Motore Motor		Volt	Hz	kW	Giri/min. RPM	**H** = Prevalenza (metri) / Head (meters) - **Q** = Portata (l/min.) / Capacity (l/min.)											
								0	5	10	12	15	18	22	24	30	35	40	**H**
EPH 20	●	L	MF	230	50	0.22	2800	29	20	10	6	0							
EPH 25	●	L	MF	230	50	0.45	2800	60	47	30	23	12	0						
EP 20	●	M	MF	230	50	0.22	2800	29	20	10	6	0							
	●	M	MF	110	50	0.22	2800	29	20	10	6	0							
	●	I	TF	230-400	50	0.26	2800	29	20	10	6	0							
	●	M	TF	230-400	50	0.26	2800	29	20	10	6	0							
EP 25	X	M	MF	230	50	0.45	2800	60	47	30	23	12	0						
	X	M	MF	110	50	0.45	2800	60	47	30	23	12	0						
	X	I	TF	230-400	50	0.56	2800	60	47	30	23	12	0						
	X	M	TF	230-400	50	0.56	2800	60	47	30	23	12	0						
EP 30	X	M	MF	230	50	0.75	1400	75	60	40	30	15	0						
	X	M	MF	110	50	0.75	1400	75	60	40	30	15	0						
	X	I	TF	230-400	50	0.75	1400	75	60	40	30	15	0						
	X	M	TF	230-400	50	0.75	1400	75	60	40	30	15	0						**Q**
EP 40	X	I	MF	230	50	0.75	1400	120	105	85	80	62	45	0					
	X	I	MF	110	50	0.75	1400	120	105	85	80	62	45	0					
	X	I	MF	230	50	1.1	1400	120	105	85	80	62	45	0					
	X	I	MF	110	50	1.1	1400	120	105	85	80	62	45	0					
	X	I	TF	230-400	50	0.75	1400	120	105	85	80	62	45	0					
	X	I	TF	230-400	50	1.1	1400	120	105	85	80	62	45	0					
	X	M	TF	230-400	50	1.1	1400	120	105	85	80	62	45	0					
EP 50	n.d.	I	MF	230	50	1.87	1400	230	205	175	160	140	120	80	60	0			
	n.d.	I	MF	110	50	1.87	1400	230	205	175	160	140	120	80	60	0			
	n.d.	I	TF	230-400	50	1.87	1400	230	205	175	160	140	120	80	60	0			
	n.d.	M	TF	230-400	50	1.87	1400	230	205	175	160	140	120	80	60	0			
EP 70	n.d.	M	TF	230-400	50	5.5	1400	500	455	415	390	365	330	280	255	165	90	0	
	n.d.	M	TF	230-400	50	7.5	1400	500	455	415	390	365	330	280	255	165	90	0	

ELETTROPOMPE A CORRENTE CONTINUA (CC) CON MANIGLIA/ DIRECT CURRENT ELECTRIC PUMPS (CC) WITH HANDLE																			
Modello Type	Maniglia Handle	Motore Motor		Volt	A	kW	Giri/min. RPM	**H** = Prevalenza (metri) / Head (meters) - **Q** = Portata (l/min.) / Capacity (l/min.)											
								0	5	8	10	12	15	18	20	22	24	30	**H**
EP 20	●	M	CC	12	26	0.33	2000	25	15	6	0								
	●	M	CC	24	14	0.33	2000	25	15	6	0								
EP 20 T	●	M	CC	12	36	0.45	3000	32	26	22	19	16	12	7	3	0			
	●	M	CC	24	22	0.45	3000	32	26	22	19	16	12	7	3	0			
EP 25	●	M	CC	12	38	0.45	2000	53	35	22	12	0							
	●	M	CC	24	22	0.45	2000	53	35	22	12	0							**Q**
EP 30	●	M	CC	24	28	0.6	1400	75	60	47	40	30	15	0					
EP 40	●	M	CC	24	45	1.1	1400	120	105	95	85	80	62	45	30	0			
EP 50	n.d.	M	CC	24	95	1.5	1400	230	205	185	175	160	140	120	95	80	60	0	

● = Pompe con maniglia inclusa / Pumps with handle included - X = disponibile a richiesta / available on request - n.d. = non disponibile / not available

ELETTROPOMPE MONOFASE (MF) O TRIFASE (TF) - **60 Hz** / SINGLE-PHASE (MF) OR THREE PHASE (TF) ELECTRIC PUMPS - **60 Hz**																				
Modello Type	Maniglia Handle	Motore Motor		Volt	Hz	kW	Giri/min. RPM	**H** = Prevalenza (metri) / Head (meters) - **Q** = Portata (l/min.) / Capacity (l/min.)											
								0	5	10	15	18	22	24	30	35	40	45	**H**
EP 20	●	M	MF	230	60	0.26	3300	35	31	25	16	10	3	0					
	●	M	MF	110	60	0.26	3300	35	31	25	16	10	3	0					
	●	I	TF	230-400*	60	0.31	3300	35	31	25	16	10	3	0					
	●	M	TF	230-400*	60	0.31	3300	35	31	25	16	10	3	0					
EP 25	X	M	MF	230	60	0.54	3300	75	63	50	34	24	8	0					
	X	M	MF	110	60	0.54	3300	75	63	50	34	24	8	0					
	X	I	TF	230-400*	60	0.67	3300	75	63	50	34	24	8	0					
	X	M	TF	230-400*	60	0.67	3300	75	63	50	34	24	8	0					
EP 30	X	M	MF	230	60	0.90	1700	95	78	60	37	23	0						
	X	M	MF	110	60	0.90	1700	95	78	60	37	23	0						
	X	I	TF	230-400*	60	0.90	1700	95	78	60	37	23	0						**Q**
	X	M	TF	230-400*	60	0.90	1700	95	78	60	37	23	0						
EP 40	X	I	MF	230	60	1.34	1700	150	130	107	80	60	25	0					
	X	I	MF	110	60	1.34	1700	150	130	107	80	60	25	0					
	X	I	TF	230-400*	60	1.34	1700	150	130	107	80	60	25	0					
	X	M	TF	230-400*	60	1.34	1700	150	130	107	80	60	25	0					
EP 50	n.d.	I	MF	230	60	2.23	1700	250	225	200	165	145	115	100	45	0			
	n.d.	I	MF	110	60	2.23	1700	250	225	200	165	145	115	100	45	0			
	n.d.	I	TF	230-400*	60	2.60	1700	250	225	200	165	145	115	100	45	0			
	n.d.	M	TF	230-400*	60	2.60	1700	250	225	200	165	145	115	100	45	0			
EP 70	n.d.	M	TF	230-400*	60	9.00	1700	570	530	490	440	400	360	340	260	190	100	0	

● = Pompe con maniglia inclusa / Pumps with handle included - X = disponibile a richiesta / available on request - n.d. = non disponibile / not available
* A richiesta disponibile anche 255-440V e 277-480V / Available on request 255-440V and 277-480V

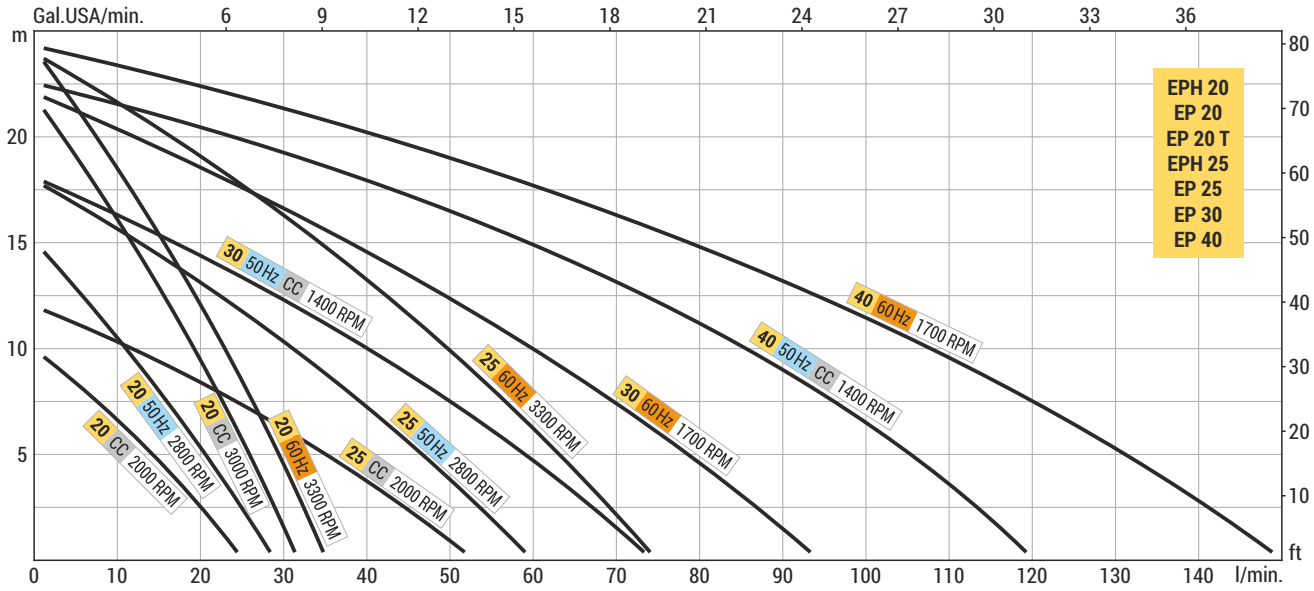

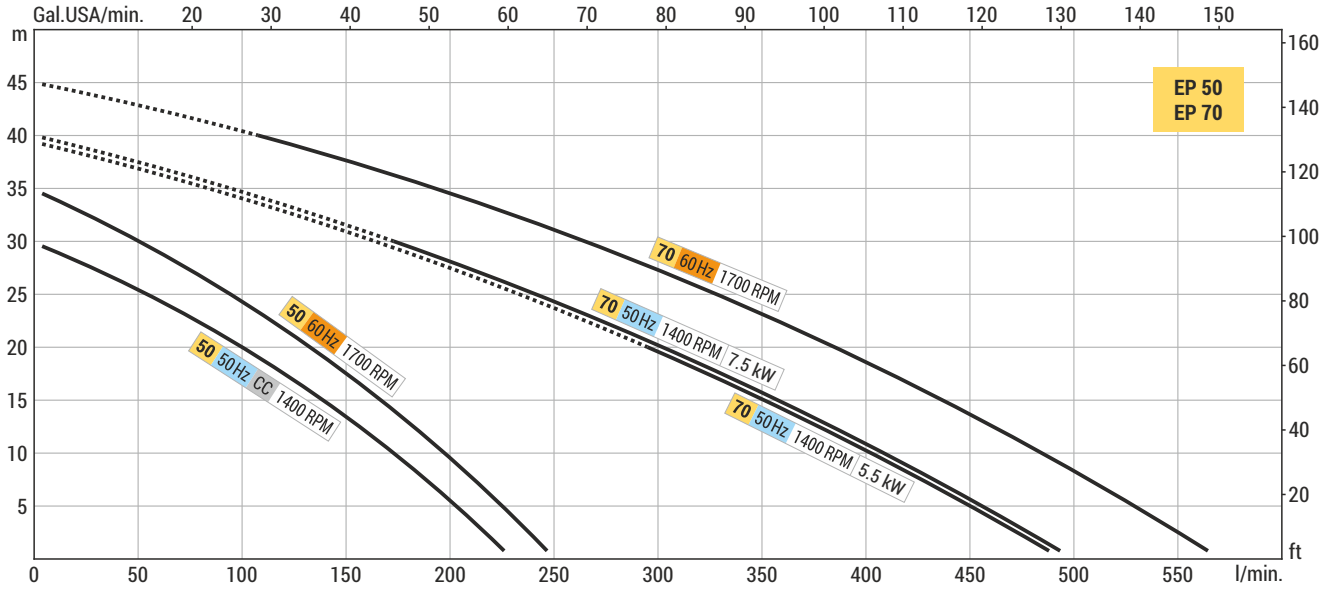

EPH 20
EP 20

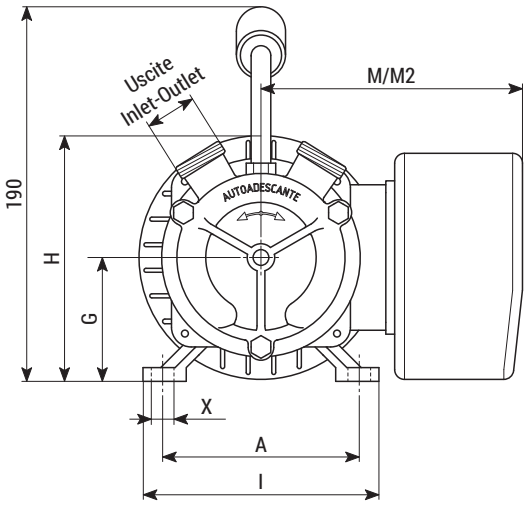

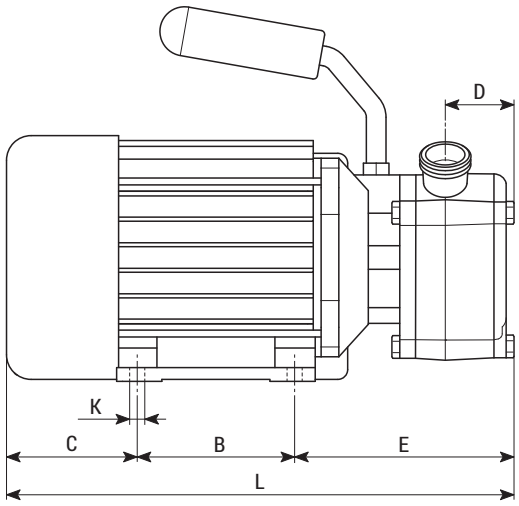

EPH 25
EP 25

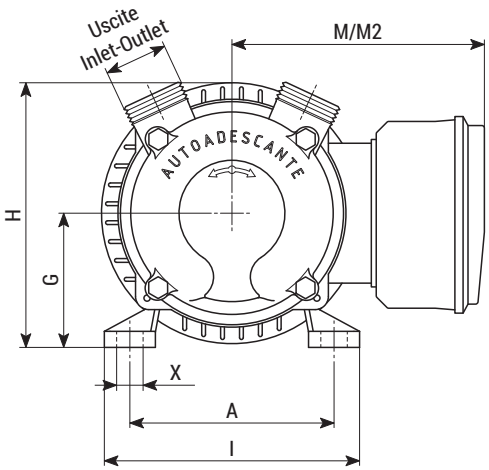

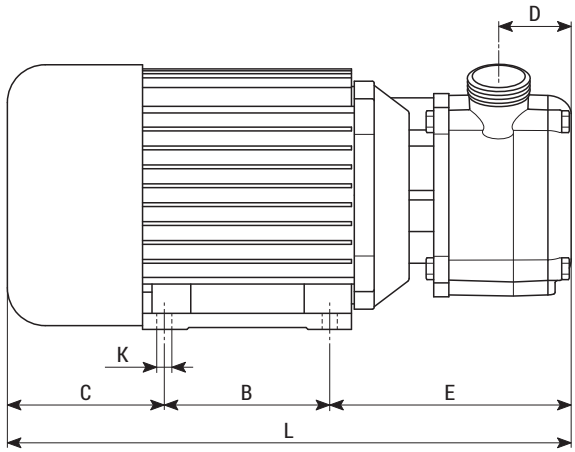

EP 20 CC
EP 20 T
EP 25 CC

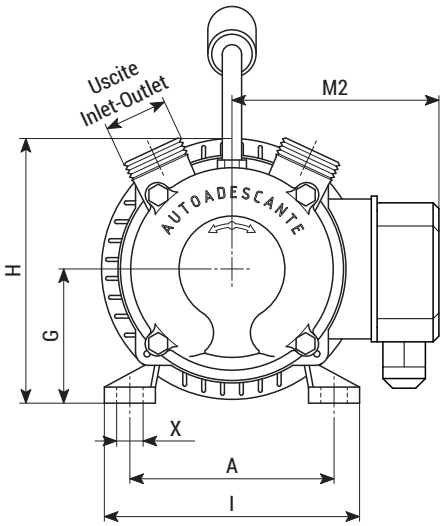

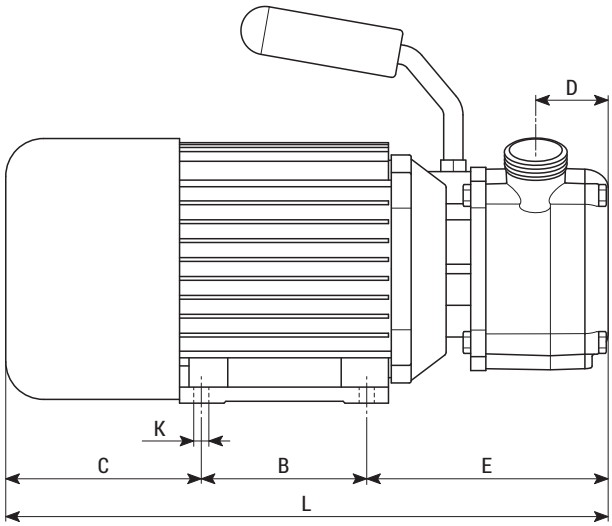

Raccordi
Pipe fittings

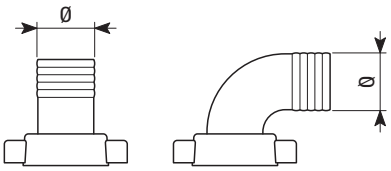

Tipo Type	Uscite Inlet-Outlet	Raccordi Pipe fittings	Motore Motor	Peso Weight	Dimensioni (mm) / Dimensions (mm)													
					A	B	C	D	E	G	H	I	K	L	M *	M2 *	N	X
EPH 20	BSP-M 3/4"	Ø20	MF	5.5 kg	90	80	70	35	110	63	100	110	7	260	115	-	-	10
EPH 25	BSP-M 1"	Ø25	MF	9.2 kg	112	90	78	40	127	71	124	136	7	295	125	-	-	12
EP 20	BSP-M 3/4"	Ø20	CC	5.7 kg	100	80	100	35	115	63	106	120	7	295	-	100	-	12
			MF/TF	5.6 kg	90	80	70	35	110	63	100	110	7	260	135	105	-	10
EP 25	BSP-M 1"	Ø25	CC	9.3 kg	112	80	108	40	133	71	124	132	8	320	-	110	-	12
			MF/TF	9.2 kg	112	90	88	40	127	71	124	136	8	305	145	110	-	12

n.d. = Raccordi non disponibili / Pipe fittings not available
M * = interruttore/invertitore-portacondensatore / on-off reverse switch-capacitor box - M2 * = morsettiera / terminal board connection

EP 30
EP 40
EP 50

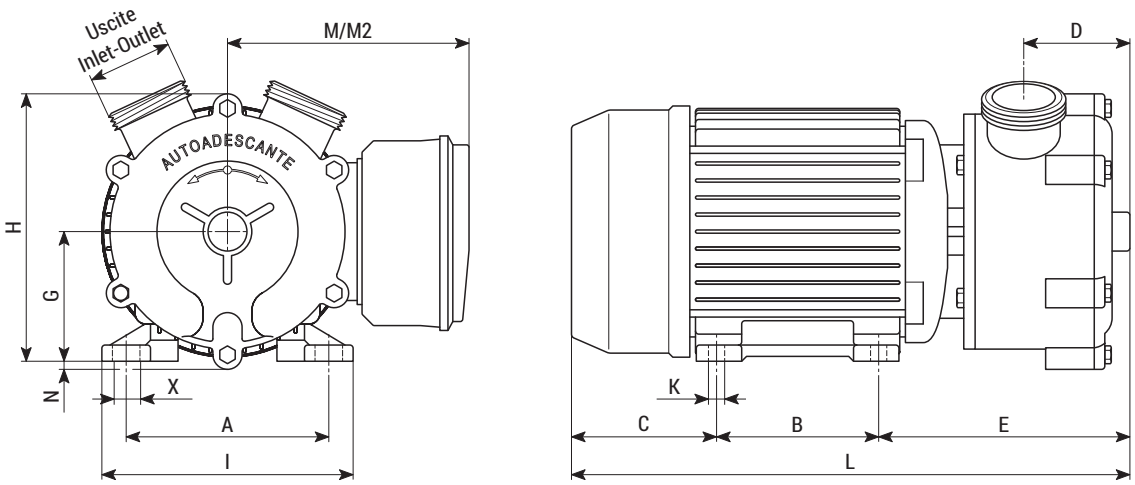

EP 70

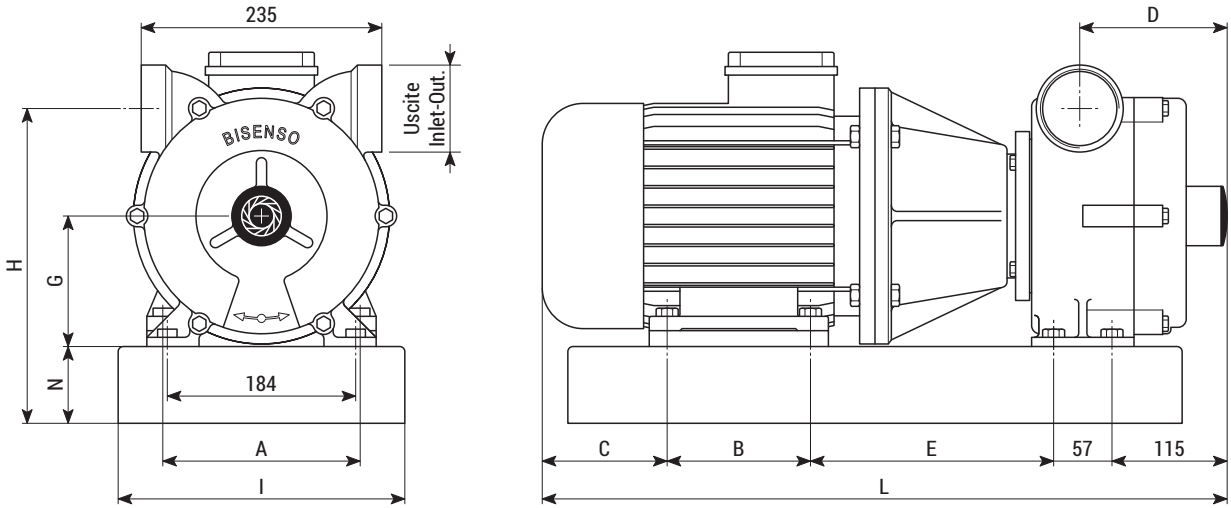

Raccordi
Pipe fittings

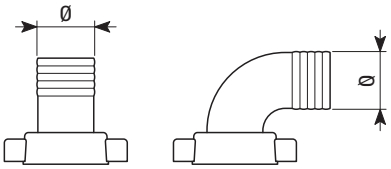

Tipo Type	Uscite Inlet-Outlet	Raccordi Pipe fittings	Motore Motor	Peso Weight	Dimensioni (mm) / Dimensions (mm)													
					A	B	C	D	E	G	H	I	K	L	M *	M2 *	N	X
EP 30	BSP-M 1"1/4	Ø30	CC	13.2 kg	125	100	135	50	140	80	165	160	8	375	-	125	5	16
			MF/TF	12.7 kg	125	100	90	50	140	80	165	155	10	330	155	125	5	17.5
EP 40	BSP-M 1"1/2	Ø40	CC	20.0 kg	140	125	185	67	180	90	175	175	10	490	-	130	-	17.5
			MF/TF	14.5 kg	125	100	90	67	162	80	165	155	10	352	155	125	5	17.5
EP 50	BSP-M 2"	Ø50	CC	31.9 kg	140	125	137	90	180	90	194	175	10	442	-	-	14	17.5
			MF/TF	26.5 kg	140	125	100	90	210	90	194	175	10	435	160	130	14	17.5
EP 70	BSP-F 2"1/2	n.d.	TF 5.5 kW	76.5 kg	200	140	137	146	242	128	306	270	11	690	-	-	72.5	18
			TF 7.5 kW	90.0 kg	216	178	155	144	280	156	334	280	11	785	-	-	72.5	18

n.d. = Raccordi non disponibili / Pipe fittings not available
M * = interruttore/invertitore-portacondensatore / on-off reverse switch-capacitor box - M2 * = morsettiera / terminal board connection

EP

ELETTROPOMPE IN ACCIAIO INOX AISI 316
STAINLESS STEEL AISI 316 ELECTRIC PUMPS

EP 80 Inox

EP SENIOR 1"1/2
EP MASTER 2"

EP JUNIOR 1"1/4

EPH-EP NEOS 3/4"

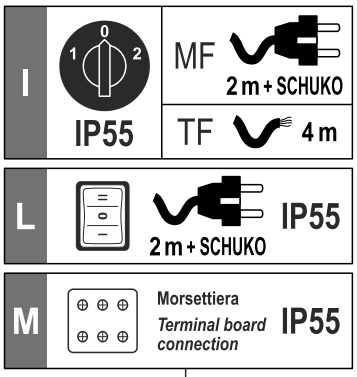

ELETTROPOMPE MONOFASE (MF) O TRIFASE (TF) - **50 Hz** / SINGLE-PHASE (MF) OR THREE PHASE (TF) ELECTRIC PUMPS - **50 Hz**																			
Modello Type	Maniglia Handle	Motore Motor		Volt	Hz	kW	Giri/min. RPM	**H** = Prevalenza (metri) / Head (meters) - **Q** = Portata (l/min.) / Capacity (l/min.)											
								0	5	10	15	18	22	30	35	40	50	55	**H**
EPH NEOS 3/4"	X	**L**	MF	230	50	0.22	2800	29	25	18	13	8	0						
EP NEOS 3/4"	X	**M**	MF	230	50	0.22	2800	29	25	18	13	8	0						
	X	**M**	MF	110	50	0.22	2800	29	25	18	13	8	0						
	X	**I**	TF	230-400	50	0.26	2800	29	25	18	13	8	0						
	X	**M**	TF	230-400	50	0.26	2800	29	25	18	13	8	0						
EP JUNIOR 1"1/4	X	**I**	MF	230	50	0.45	2800	58	47	34	22	13	0						
	X	**I**	MF	110	50	0.45	2800	58	47	34	22	13	0						
	X	**I**	TF	230-400	50	0.56	2800	58	47	34	22	13	0						
	X	**M**	TF	230-400	50	0.56	2800	58	47	34	22	13	0						
EP SENIOR 1"1/2	X	**I**	MF	230	50	0.75	1400	120	105	85	62	45	0						
	X	**I**	MF	110	50	0.75	1400	120	105	85	62	45	0						
	X	**I**	MF	230	50	1.1	1400	120	105	85	62	45	0						
	X	**I**	MF	110	50	1.1	1400	120	105	85	62	45	0						
	X	**I**	TF	230-400	50	0.75	1400	120	105	85	62	45	0						
	X	**I**	TF	230-400	50	1.1	1400	120	105	85	62	45	0						
	X	**M**	TF	230-400	50	1.1	1400	120	105	85	62	45	0						
EP MASTER 2"	n.d.	**I**	MF	230	50	1.87	1400	230	205	175	140	120	80	0					
	n.d.	**I**	MF	110	50	1.87	1400	230	205	175	140	120	80	0					
	n.d.	**I**	TF	230-400	50	1.87	1400	230	205	175	140	120	80	0					
	n.d.	**M**	TF	230-400	50	1.87	1400	230	205	175	140	120	80	0					
EP 60 Inox	n.d.	**M**	TF	230-400	50	4.0	1400	350	310	265	220	190	150	60	0				
EP 70 Inox	n.d.	**M**	TF	230-400	50	5.5	1400	500	455	415	365	330	280	165	90	0			
	n.d.	**M**	TF	230-400	50	7.5	1400	500	455	415	365	330	280	165	90	0			
EP 80 Inox	n.d.	**M**	TF	230-400	50	15	1400	900	840	780	720	660	620	500	410	310	110	0	**Q**

ELETTROPOMPE A CORRENTE CONTINUA (CC) CON MANIGLIA/ DIRECT CURRENT ELECTRIC PUMPS (CC) WITH HANDLE																			
Modello Type	Maniglia Handle	Motore Motor		Volt	A	kW	Giri/min. RPM	**H** = Prevalenza (metri) / Head (meters) - **Q** = Portata (l/min.) / Capacity (l/min.)											
								0	2	5	8	10	12	15	20	22	24	30	**H**
EP NEOS 3/4"	X	**M**	CC	12	26	0.33	2000	25	22	18	11	5	0						
	X	**M**	CC	24	14	0.33	2000	25	22	18	11	5	0						
EP NEOS 3/4" T	X	**M**	CC	12	36	0.45	3000	34	32	29	25	22	19	15	5	0			
	X	**M**	CC	24	22	0.45	3000	34	32	29	25	22	19	15	5	0			
EP JUNIOR 1" 1/4	X	**M**	CC	12	32	0.37	2000	43	39	25	11	0							
	X	**M**	CC	24	20	0.37	2000	43	39	25	11	0							
EP SENIOR 1" 1/2	X	**M**	CC	24	45	1.1	1400	120	115	105	95	85	80	62	30	0			
EP MASTER 2"	n.d.	**I**	CC	24	95	1.5	1400	230	220	205	185	175	160	140	95	80	60	0	**Q**

X = disponibile a richiesta / available on request - n.d. = non disponibile / not available

ELETTROPOMPE MONOFASE (MF) O TRIFASE (TF) - **60 Hz** / SINGLE-PHASE (MF) OR THREE PHASE (TF) ELECTRIC PUMPS - **60 Hz**																				
Modello Type	Maniglia Handle	Motore Motor		Volt	Hz	kW	Giri/min. RPM	**H** = Prevalenza (metri) / Head (meters) - **Q** = Portata (l/min.) / Capacity (l/min.)											
								0	5	10	15	22	24	35	40	45	55	60	**H**
EP NEOS 3/4"	X	M	MF	230	60	0.26	3300	36	31	25	17	4	0						
	X	M	MF	110	60	0.26	3300	36	31	25	17	4	0						
	X	I	TF	230-400	60	0.31	3300	36	31	25	17	4	0						
	X	M	TF	230-400	60	0.31	3300	36	31	25	17	4	0						
EP JUNIOR 1"1/4	X	I	MF	230	60	0.54	3300	62	52	40	27	7	0						
	X	I	MF	110	60	0.54	3300	62	52	40	27	7	0						
	X	I	TF	230-400	60	0.67	3300	62	52	40	27	7	0						
	X	M	TF	230-400	60	0.67	3300	62	52	40	27	7	0						
EP SENIOR 1"1/2	X	I	MF	230	60	1.34	1700	150	130	107	80	25	0						
	X	I	MF	110	60	1.34	1700	150	130	107	80	25	0						**Q**
	X	I	TF	230-400	60	1.34	1700	150	130	107	80	25	0						
	X	M	TF	230-400	60	1.34	1700	150	130	107	80	25	0						
EP MASTER 2"	n.d.	I	MF	230	60	2.23	1700	250	225	200	165	115	100	0					
	n.d.	I	MF	110	60	2.23	1700	250	225	200	165	115	100	0					
	n.d.	I	TF	230-400	60	2.60	1700	250	225	200	165	115	100	0					
	n.d.	M	TF	230-400	60	2.60	1700	250	225	200	165	115	100	0					
EP 60 Inox	n.d.	M	TF	230-400	60	4.80	1700	385	350	310	265	200	180	60	0				
EP 70 Inox	n.d.	M	TF	230-400	60	9.00	1700	570	530	490	440	360	340	190	100	0			
EP 80 Inox	n.d.	M	TF	230-400	60	18.00	1700	970	910	850	770	670	640	470	380	290	100	0	

X = disponibile a richiesta / available on request - n.d. = non disponibile / not available
* A richiesta disponibile anche 255-440V e 277-480V / Available on request 255-440V and 277-480V

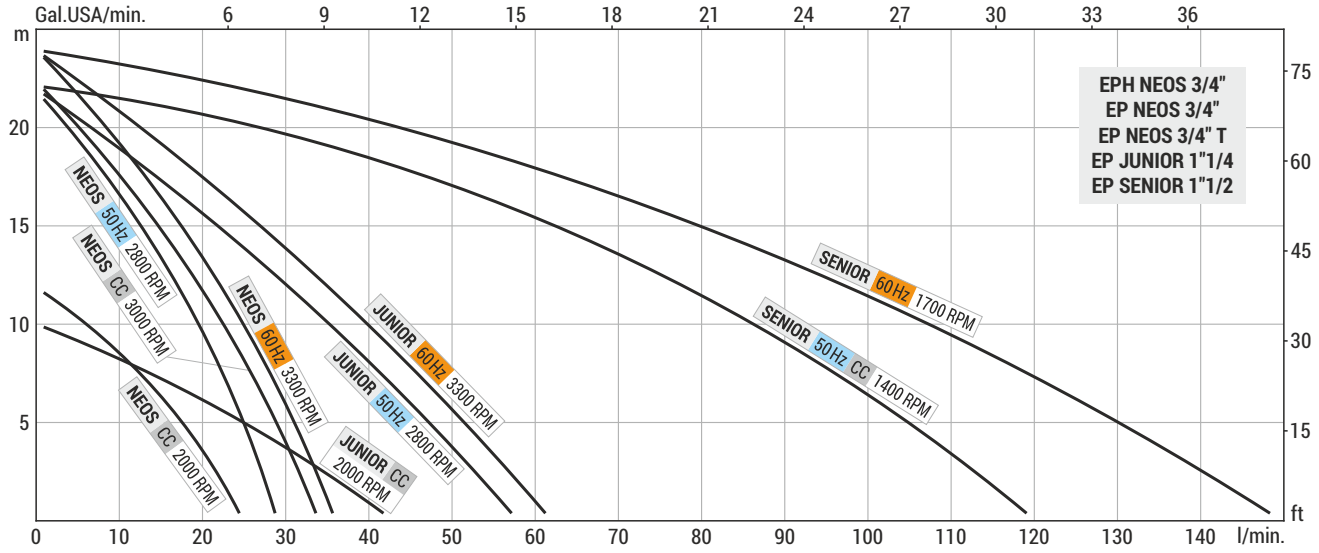

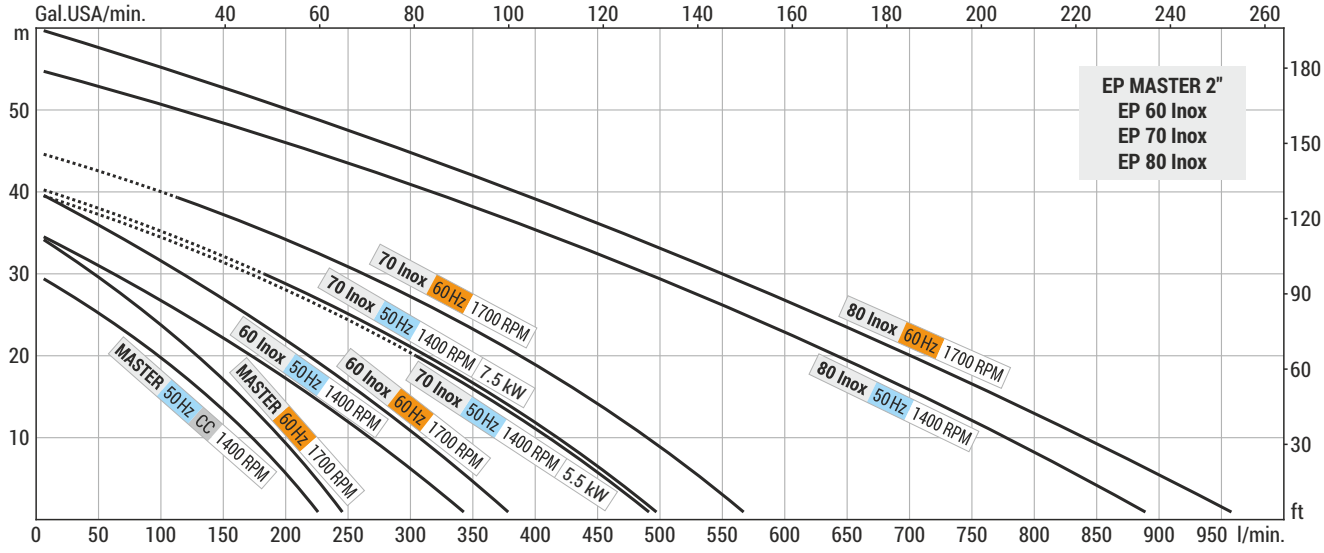

EPH NEOS 3/4"
EP NEOS 3/4"

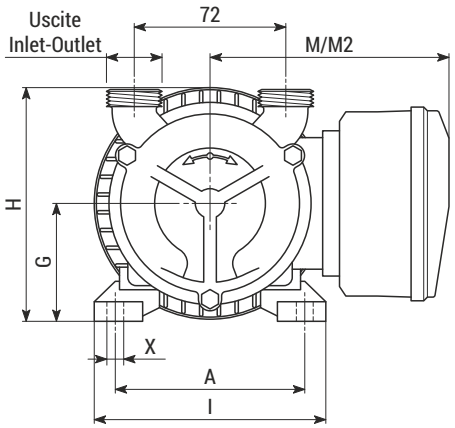

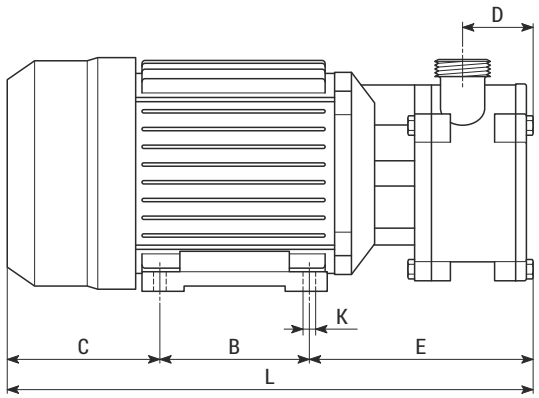

EP JUNIOR 1"1/4

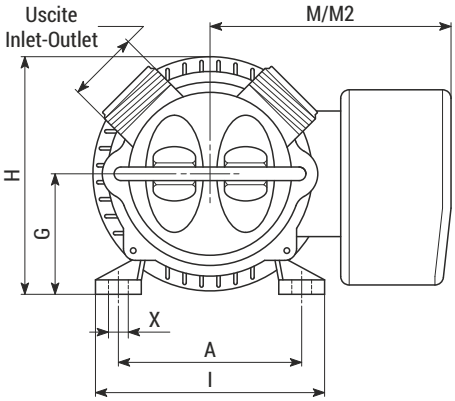

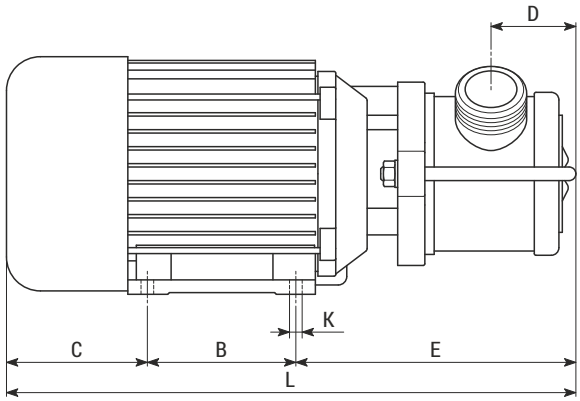

EP SENIOR 1"1/2
EP MASTER 2"

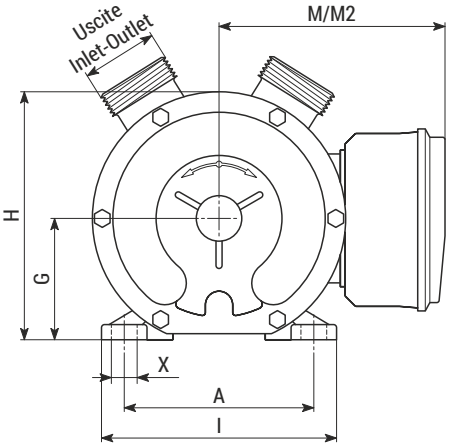

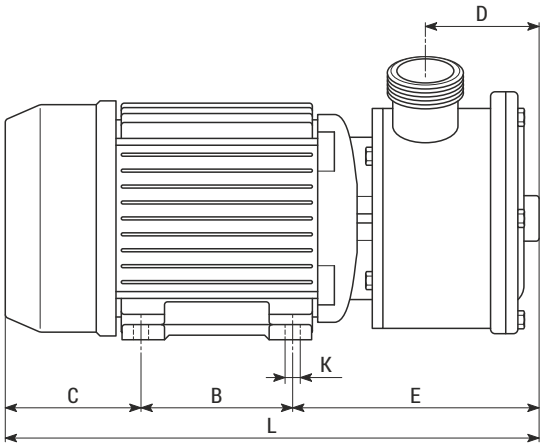

Tipo Type	Uscite Inlet-Outlet	Raccordi Pipe fittings	Motore Motor	Peso Weight	Dimensioni (mm) / Dimensions (mm)												
					A	B	C	D	E	G	H	I	K	L	M***	M2***	X
EPH NEOS 3/4"	BSP-M 3/4" *	Ø20 **	MF	5.5 kg	90	71	73	34	107	56	113	-	5.5	251	110	-	8
EP NEOS 3/4"	BSP-M 3/4" *	Ø20 **	CC	4.7 kg	100	80	100	34	115	71	123	-	7	295	-	110	12
			MF/TF	5.1 kg	90	71	73	34	107	56	113	-	5.5	251	135	100	8
EP JUNIOR 1"1/4	BSP-M 1"1/4 *	Ø30 **	CC	9.3 kg	112	90	102	50	168	71	137	136	8	360	-	110	12
			MF/TF	9.6 kg	112	90	78	50	168	71	137	136	8	336	145	110	12
EP SENIOR 1"1/2	BSP-M 1"1/2 *	Ø40 **	CC	19.9 kg	140	125	185	76	190	90	165	175	10	500	-	130	17.5
			MF/TF	17.6 kg	125	100	90	76	170	80	165	155	10	360	155	125	17.5
EP MASTER 2"	BSP-M 2" *	Ø50 **	CC	35.5 kg	140	125	137	94	185	90	193	175	10	447	-	-	17.5
			MF/TF	27.5 kg	140	125	100	94	215	90	193	175	10	440	160	130	17.5

* = Uscite standard, altre uscite disponibili p.30 / Standard inlet-outlet, different inlet-outlet are available see p.30
** = Raccordi in acciaio inox o nylon a richiesta / Stainless steel or nylon pipe fittings on request
M *** = interruttore/invertitore-portacondensatore / on-off reverse switch-capacitor box - M2 *** = morsettiera / terminal board connection
n.d. = Raccordi non disponibili / Pipe fittings not available

EP 60 Inox 2"

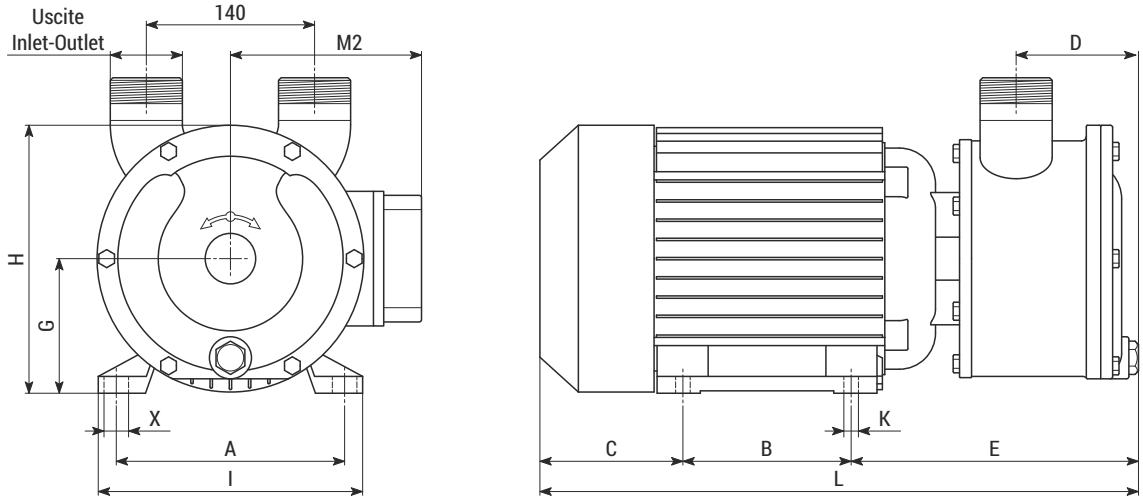

EP 70 Inox

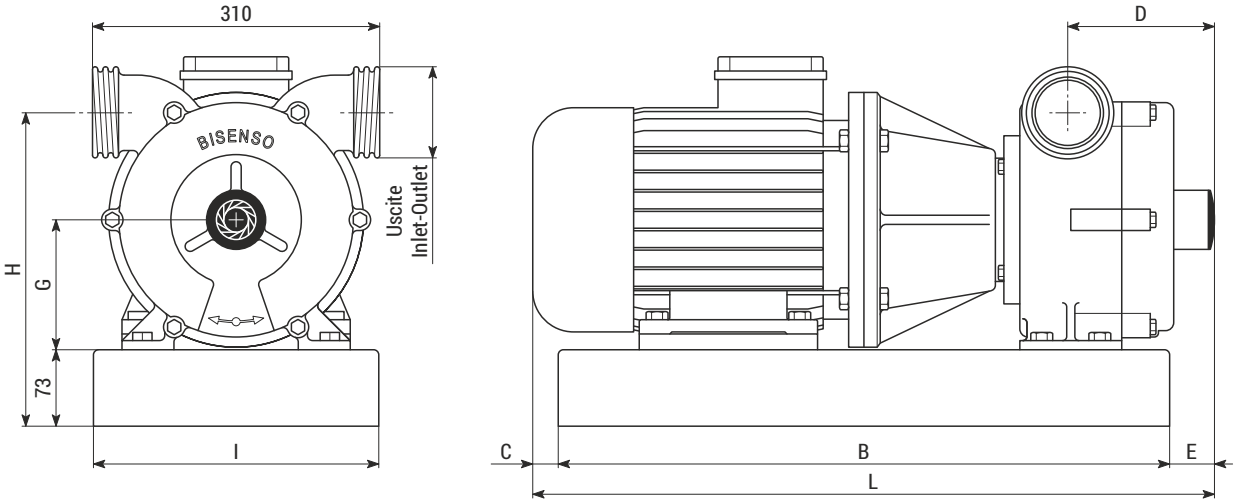

EP 80 Inox

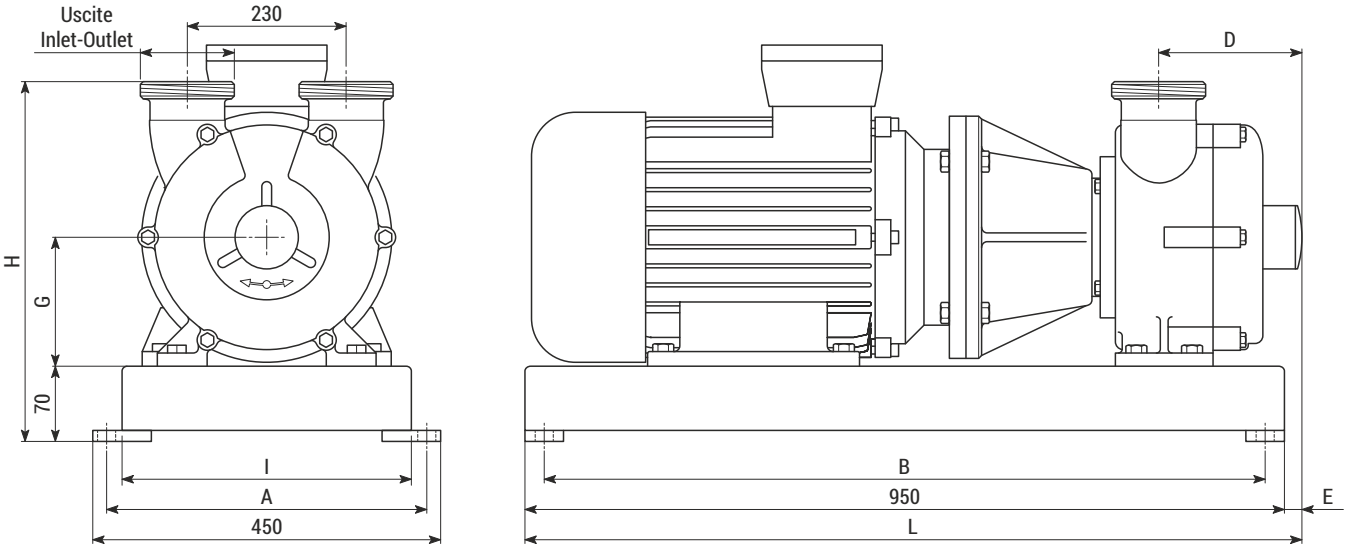

Tipo Type	Uscite Inlet-Outlet	Raccordi Pipe fittings	Motore Motor	Peso Weight	Dimensioni (mm) / Dimensions (mm)											
					A	B	C	D	E	G	H	I	K	L	M2 ***	X
EP 60 Inox 2"	BSP-M 2" *	Ø50 **	TF	42.0 kg	190	140	119	94	231	112	223	220	11	490	160	21
EP 70 Inox	DIN 65 *	n.d.	TF 5.5 kW	75.0 kg	-	600	43	144	47	128	306	270	-	690	-	-
			TF 7.5 kW	87.0 kg	-	600	110	144	80	132	310	270	-	790	-	-
EP 80 Inox	DIN 80 *	n.d.	TF 15 kW	216.0 kg	430	920	-	181	52	160	405	400	-	1002	-	-

* = Uscite standard, altre uscite disponibili p.30 / Standard inlet-outlet, different inlet-outlet are available see p.30
** = Raccordi in acciaio inox o nylon a richiesta / Stainless steel or nylon pipe fittings on request
M2 *** = morsettiera / terminal board connection
n.d. = Raccordi non disponibili / Pipe fittings not available

INV

POMPE IN ACCIAIO INOX AISI 316 CON INVERTER CON COMANDI BORDO QUADRO
STAINLESS STEEL AISI 316 PUMPS WITH FREQUENCY CONVERTER AND CONTROLS ON MAIN PANEL

Filocomando a richiesta
Remote cable control
on request

Radiocomando
a richiesta
Radio control
on request

Modello Type	Alimentazione Feeding		kW	Giri/min. RPM	Hz	H = Prevalenza (metri) / Head (meters) - Q = Portata (litri/minuto) / Capacity (liters/minute)																				
						0	2	4	5	6	8	10	12	14	15	18	20	22	24	30	35	40	45	55	60	H
INV NEOS 3/4"	TF* 400V 50Hz	MF* 230V 50Hz	0.25	1200	20	10	0																			
				1400	25	14	10	3	0																	
				1800	30	18	14	8	5	0																
				2240	40	26	24	21	20	18	14	10	5	0												
				2800	50	29	27	26	25	24	22	18	16	14	13	8	4	0								
				3300	60	36	34	32	31	30	27	25	22	19	17	12	8	4	0							
INV JUNIOR 1"1/4	TF* 400V 50Hz	MF* 230V 50Hz	0.56	1200	20	13	0																			
				1400	25	17	10	0																		
				1800	30	22	16	6	0																	
				2240	40	45	39	33	30	26	19	10	0													
				2800	50	58	54	50	47	45	40	35	30	25	22	13	7	0								
				3300	60	62	58	54	52	50	45	40	35	30	27	19	13	7	0							
INV SENIOR 1"1/2	TF* 400V 50Hz	MF* 230V 50Hz	1.1	600	20	50	35	0																		
				900	30	75	63	50	40	30	0															
				1120	40	100	90	76	70	62	48	30	0													
				1400	50	120	115	110	105	100	95	85	80	68	62	45	30	0								
				1700	60	150	142	135	130	125	115	107	95	85	80	60	40	25	0							
INV MASTER 2"	TF* 400V 50Hz	MF* 230V 50Hz	1.85	600	20	90	55	0																		
				900	30	140	125	105	95	85	65	40	0													Q
				1120	40	185	170	160	150	145	130	110	90	70	60	25	0									
				1400	50	230	220	210	205	200	185	175	160	145	140	120	95	80	60	0						
				1700	60	250	240	230	225	220	210	200	185	170	165	145	130	115	100	45	0					
INV EP 60 Inox	TF* 400V 50Hz		4.0	600	20	125	80	30	0																	
				900	30	185	160	140	125	115	85	60	30	0												
				1120	40	265	245	230	220	210	190	170	145	125	110	75	50	25	0							
				1400	50	350	335	320	310	300	285	265	250	230	220	190	170	150	130	60	0					
				1700	60	385	370	355	350	340	325	310	290	270	265	240	220	200	180	120	60	0				
INV 70 Inox	TF* 400V 50Hz		7.5	600	20	215	180	140	115	85	0															
				900	30	320	290	260	245	230	190	150	100	40	0											
				1120	40	420	400	375	360	350	325	295	265	230	215	160	110	60	0							
				1400	50	500	480	460	455	450	430	415	390	370	365	330	300	280	255	165	90	0				
				1700	60	570	550	535	530	520	500	490	465	455	440	400	380	360	340	260	190	100	0			
INV 80 Inox	TF* 400V 50Hz		15	600	20	360	310	240	200	160	0															
				900	30	540	500	470	450	430	390	340	290	230	200	100	0									
				1120	40	710	680	655	640	630	600	565	535	500	485	430	390	350	310	160	0					
				1400	50	900	880	850	840	830	800	780	750	730	720	660	650	620	580	500	410	310	220	0		
				1700	60	970	945	920	910	890	870	850	810	790	770	730	690	670	640	540	470	380	290	100	0	

* TF = trifase - MF = monofase / TF = three phase - MF = single phase

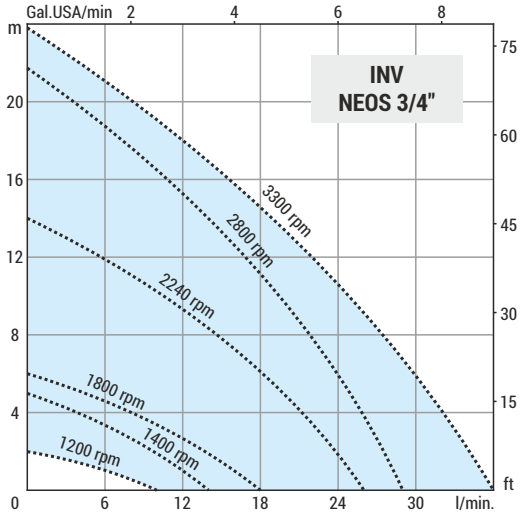
INV
NEOS 3/4"
Gal.USA/min
m
ft
l/min.
3300 rpm
2800 rpm
2240 rpm
1800 rpm
1400 rpm
1200 rpm

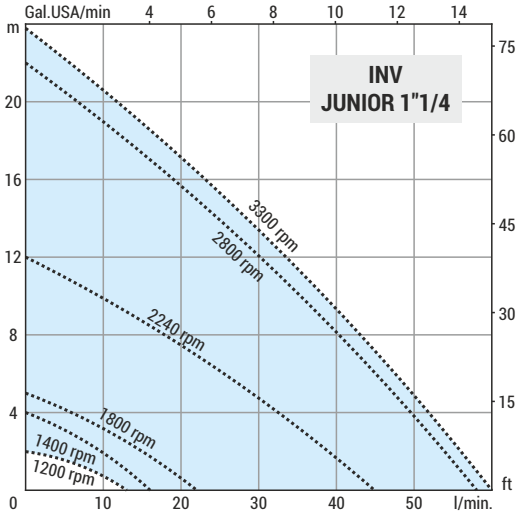
INV
JUNIOR 1"1/4
Gal.USA/min
m
ft
l/min.
3300 rpm
2800 rpm
2240 rpm
1800 rpm
1400 rpm
1200 rpm

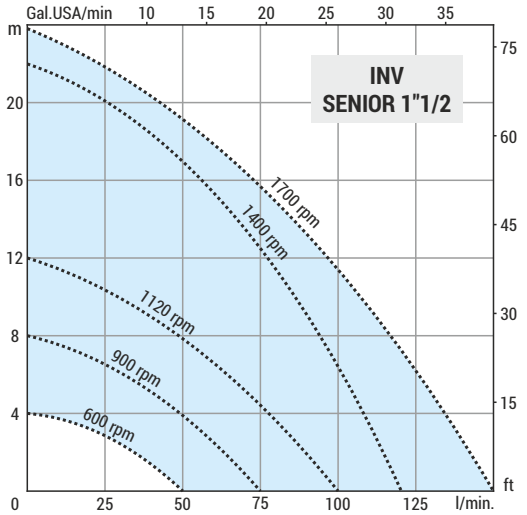
INV
SENIOR 1"1/2
Gal.USA/min
m
ft
l/min.
1700 rpm
1400 rpm
1120 rpm
900 rpm
600 rpm

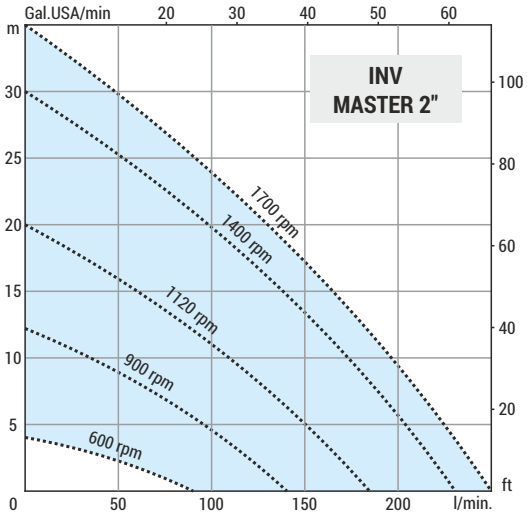
INV
MASTER 2"
Gal.USA/min
m
ft
l/min.
1700 rpm
1400 rpm
1120 rpm
900 rpm
600 rpm

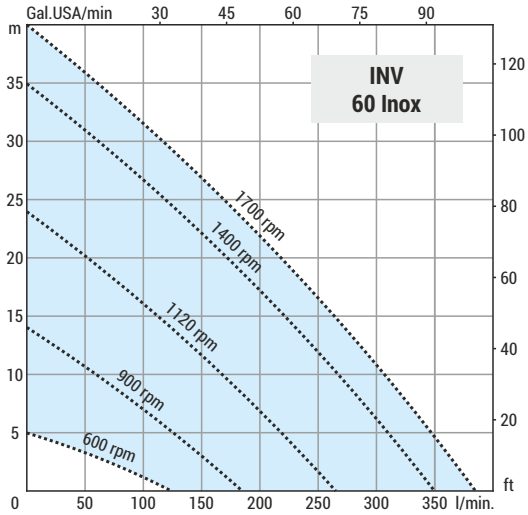
INV
60 Inox
Gal.USA/min
m
ft
l/min.
1700 rpm
1400 rpm
1120 rpm
900 rpm
600 rpm

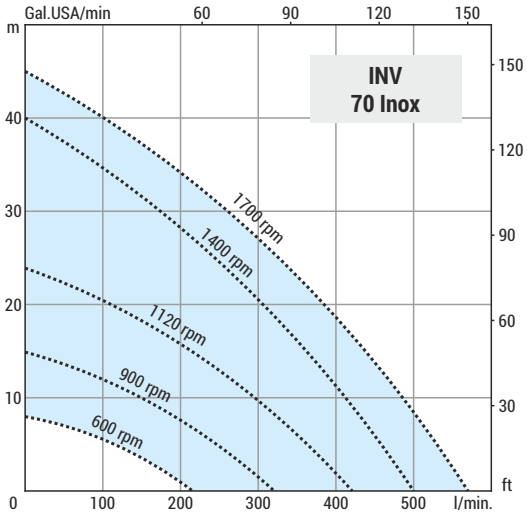
INV
70 Inox
Gal.USA/min
m
ft
l/min.
1700 rpm
1400 rpm
1120 rpm
900 rpm
600 rpm

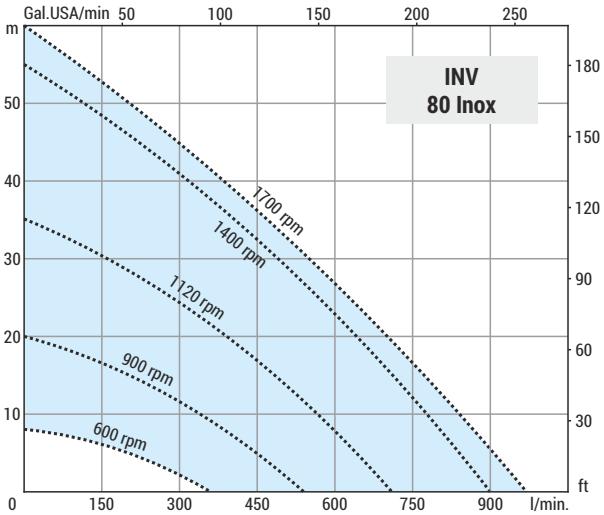
INV
80 Inox
Gal.USA/min
m
ft
l/min.
1700 rpm
1400 rpm
1120 rpm
900 rpm
600 rpm

GR ADPE

GRUPPI ANTIDEFLAGRANTI SU BASE SENZA IMPIANTO ELETTRICO
EXPLOSION PROOF GROUPS ON BASE WITHOUT CONTROL PANEL

CERTIFIED

II 2G Ex c IIC T4 X Gb
II 2G Ex c IIB T4 X Gb

GR ADPE SPECIAL Bronzo

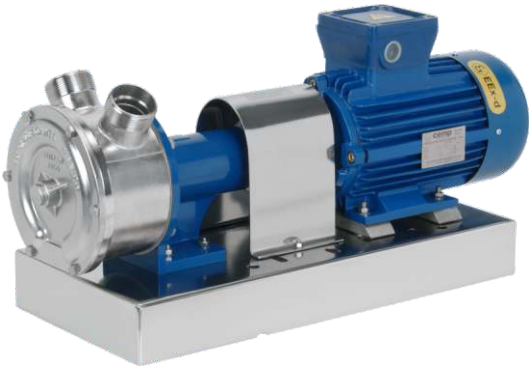

GR ADPE SPECIAL Inox

GR ADPE SPECIAL con carrello

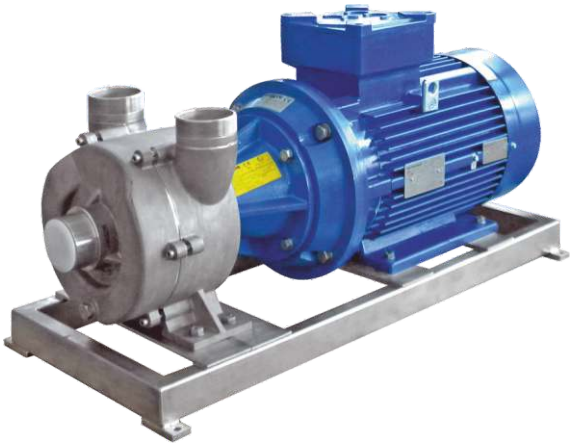

GR ADPE NAUTIC 80 Inox

GRUPPI MONOFASE (MF) O TRIFASE (TF) - **50 Hz** / SINGLE-PHASE (MF) OR THREE PHASE (TF) GROUPS **- 50 Hz**

Modello Type	Materiale corpo Body material	Materiale girante Impeller material	Motore Motor		Hz	kW	Giri/min. RPM	**H** = Prevalenza (m) / Head (m) - **Q** = Portata (l/min.) / Capacity (l/min.)										
								0	5	10	15	18	22	30	35	40	55	**H**
GR ADPE SPECIAL 20	Bronzo Bronze	Bronzo Bronze	TF* 400V	MF* 230V	50	0.25	2800	29	20	10	0							**Q**
GR ADPE SPECIAL 25	Bronzo Bronze	Bronzo Bronze	TF* 400V	MF* 230V	50	0.55	2800	60	47	30	12	0						
GR ADPE SPECIAL 30	Bronzo Bronze	Bronzo Bronze	TF* 400V	MF* 230V	50	0.75	1400	75	60	40	15	0						
GR ADPE SPECIAL 40	Bronzo Bronze	Bronzo Bronze	TF* 400V	MF* 230V	50	0.75	1400	120	105	85	62	45	0					
GR ADPE SPECIAL 50	Bronzo Bronze	Bronzo Bronze	TF* 400V	MF* 230V	50	1.5	1400	230	205	175	140	120	80	0				
GR ADPE NAUTIC 70	Bronzo Bronze	Bronzo Bronze	TF* 400V		50	5.5 7.5	1400 1400	500	455	415	365	330	280	165	90	0		
GR ADPE SPECIAL NEOS 3/4"	Inox AISI 316 S.S. AISI 316	Bronzo Bronze	TF* 400V	MF* 230V	50	0.25	2800	29	25	18	13	8	0					
GR ADPE SPECIAL SENIOR 1"1/2	Inox AISI 316 S.S. AISI 316	Bronzo Bronze	TF* 400V	MF* 230V	50	0.75	1400	120	105	85	62	45	0					
GR ADPE SPECIAL MASTER 2"	Inox AISI 316 S.S. AISI 316	Bronzo Bronze	TF* 400V	MF* 230V	50	1.5	1400	230	205	175	140	120	80	0				
GR ADPE SPECIAL 60 Inox 2"	Inox AISI 316 S.S. AISI 316	Inox AISI 316 S.S. AISI 316	TF* 400V		50	4.0	1400	350	310	265	220	190	150	60	0			
GR ADPE NAUTIC 70 Inox	Inox AISI 316 S.S. AISI 316	Bronzo Bronze	TF* 400V		50	5.5 7.5	1400 1400	500	455	415	365	330	280	165	90	0		
GR ADPE NAUTIC 80 Inox	Inox AISI 316 S.S. AISI 316	Inox AISI 316 S.S. AISI 316	TF* 400V		50	15.0	1400	900	840	780	720	660	620	500	410	310	0	

* TF = trifase - MF = monofase / TF = three phase - MF = single phase

GRUPPI MONOFASE (MF) O TRIFASE (TF) - **60 Hz** / SINGLE-PHASE (MF) OR THREE PHASE (TF) GROUPS - **60 Hz**																					
Modello Type	Materiale corpo Body material	Materiale girante Impeller material	Motore Motor		Hz	kW	Giri/min. RPM	H = Prevalenza (m) / Head (m) - Q = Portata (l/min.) / Capacity (l/min.)											
								0	5	10	15	22	24	35	40	45	55	60	H
GR ADPE SPECIAL 20	Bronzo Bronze	Bronzo Bronze	MF* 230V	TF* 400V	60	0.31	3300	36	31	25	17	4	0						
GR ADPE SPECIAL 25	Bronzo Bronze	Bronzo Bronze	MF* 230V	TF* 400V	60	0.67	3300	75	62	47	30	5	0						
GR ADPE SPECIAL 30	Bronzo Bronze	Bronzo Bronze	MF* 230V	TF* 400V	60	0.90	1700	95	78	60	37	0							
GR ADPE SPECIAL 40	Bronzo Bronze	Bronzo Bronze	MF* 230V	TF* 400V	60	1.10	1700	150	130	107	80	25	0						
GR ADPE SPECIAL 50	Bronzo Bronze	Bronzo Bronze	MF* 230V		60	2.23	1700	250	225	200	165	115	100	0					
			TF* 400V		60	2.60	1700												
GR ADPE NAUTIC 70	Bronzo Bronze	Bronzo Bronze	TF* 400V		60	9.0	1700	570	530	490	440	360	340	190	100	0			Q
GR ADPE SPECIAL NEOS 3/4"	Inox AISI 316 S.S. AISI 316	Bronzo Bronze	MF* 230V	TF* 400V	60	0.31	3300	36	31	25	17	4	0						
GR ADPE SPECIAL SENIOR 1"1/2	Inox AISI 316 S.S. AISI 316	Bronzo Bronze	MF* 230V	TF* 400V	60	1.10	1700	150	130	107	80	25	0						
GR ADPE SPECIAL MASTER 2"	Inox AISI 316 S.S. AISI 316	Bronzo Bronze	MF* 230V		60	2.23	1700	250	225	200	165	115	100	0					
			TF* 400V		60	2.60	1700												
GR ADPE SPECIAL 60 Inox 2"	Inox AISI 316 S.S. AISI 316	Inox AISI 316 S.S. AISI 316	TF* 400V		60	4.80	1700	385	350	310	270	210	190	80	0				
GR ADPE NAUTIC 70 Inox	Inox AISI 316 S.S. AISI 316	Bronzo Bronze	TF* 400V		60	9.00	1700	570	530	490	440	360	340	190	100	0			
GR ADPE NAUTIC 80 Inox	Inox AISI 316 S.S. AISI 316	Inox AISI 316 S.S. AISI 316	TF* 400V		60	18.0	1700	970	910	850	770	670	640	470	380	290	100	0	

* TF = trifase - MF = monofase / TF = three phase - MF = single phase

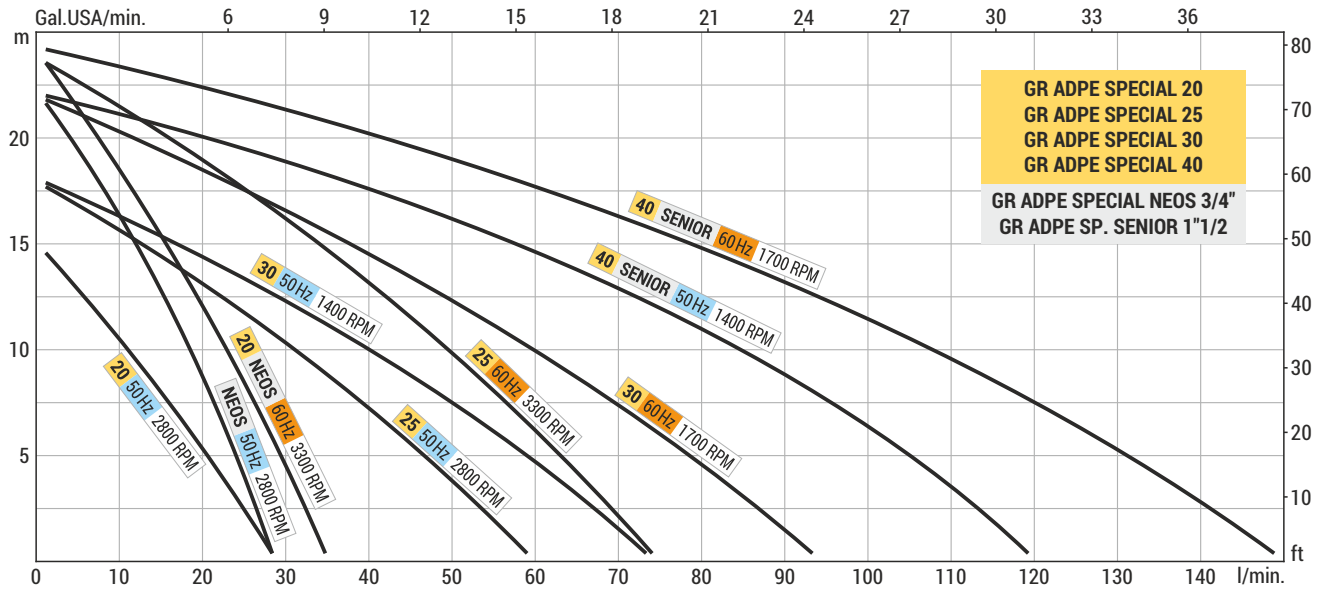

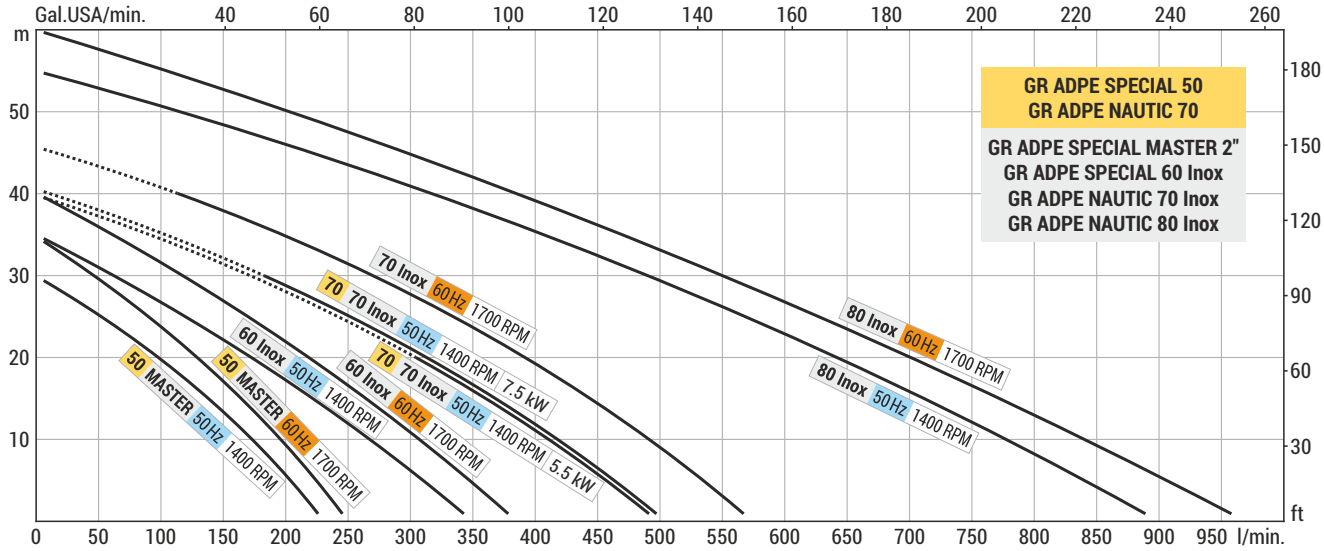

GR ADPE SPECIAL 20 - 25

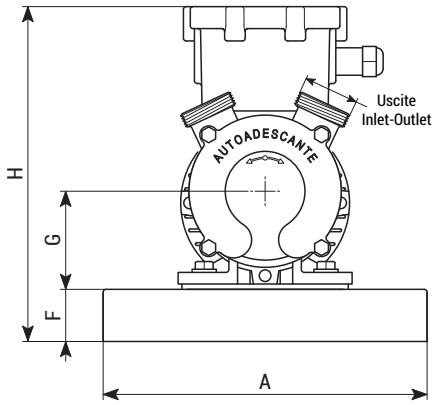

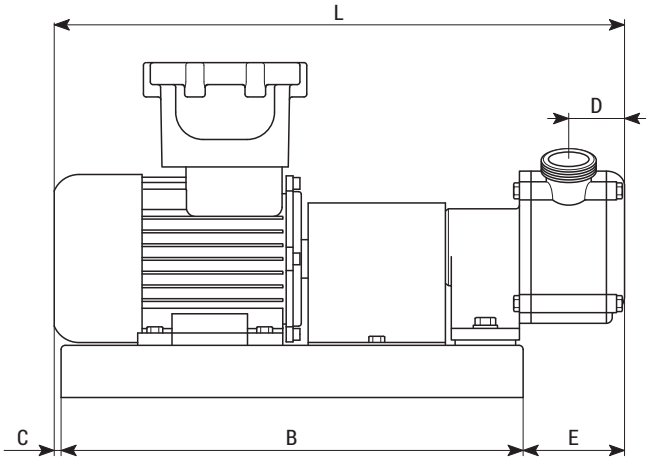

GR ADPE SPECIAL NEOS 3/4"

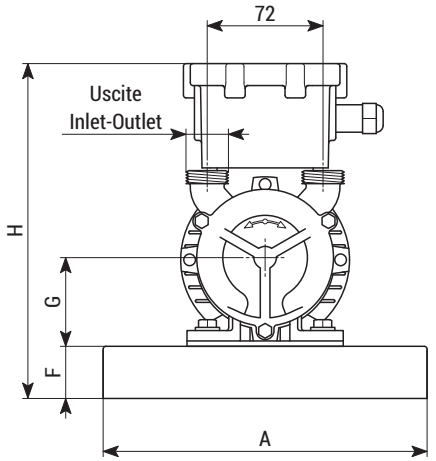

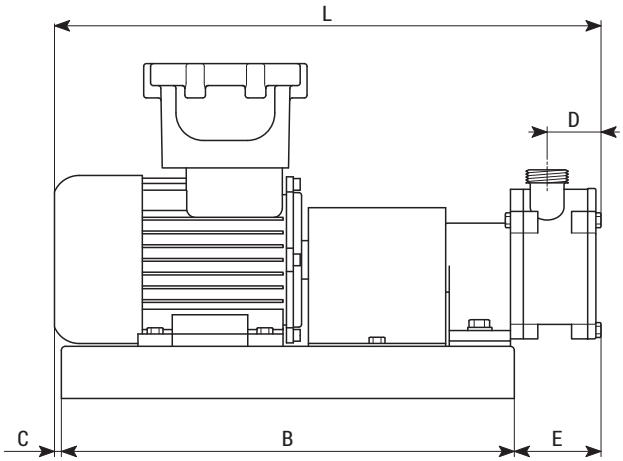

GR ADPE SPECIAL 30 - 40 - 50 SENIOR 1"1/2 MASTER 2"

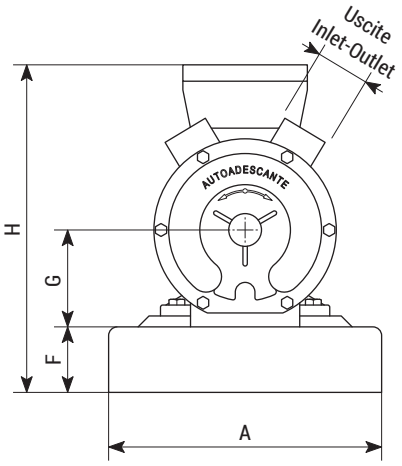

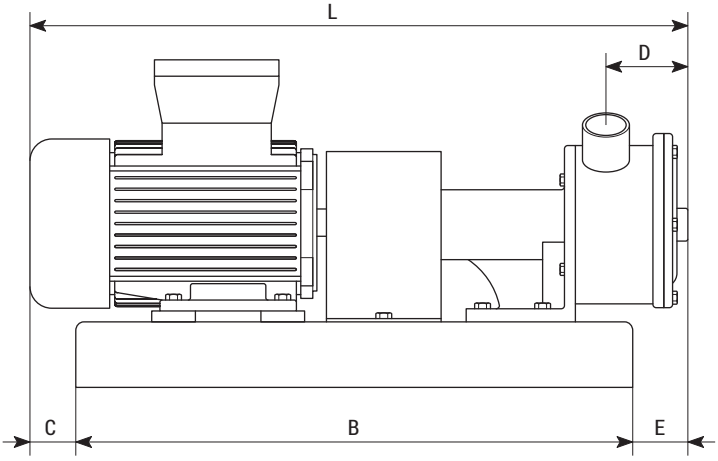

Tipo Type	Peso Weight	Uscite Inlet-Outlet	Raccordi Pipe fittings	Dimensioni (mm) / Dimensions (mm)								
				A	B	C	D	E	F	G	H	L
GR ADPE SPECIAL 20	8.7 kg	BSP-M 3/4"	Ø20	236	330	55,4	35	55,6	38	63	245	441
GR ADPE SPECIAL 25	12.7 kg	BSP-M 1"	Ø25	236	330	44,5	38,3	71,2	38	71	258	445,7
GR ADPE SPECIAL 30	24.5 kg	BSP-M 1"1/4	Ø30	270	600	-	52	4,6	72,5	90	332	605
GR ADPE SPECIAL 40	26.0 kg	BSP-M 1"1/2	Ø40	270	600	-	66	28	72,5	90	332	628
GR ADPE SPECIAL 50	34.4 kg	BSP-M 2"	Ø50	270	600	39	90	62	72,5	107	335	701
GR ADPE SPECIAL NEOS 3/4"	10.0 kg	BSP-M 3/4" *	Ø20 **	236	330	12	34	55	38	63	241	397
GR ADPE SPECIAL SENIOR 1"1/2	25.8 kg	BSP-M 1"1/2 *	Ø40 **	270	600	-	75,3	34	72,5	89	332	635
GR ADPE SPECIAL MASTER 2"	36.1 kg	BSP-M 2" *	Ø50 **	270	600	39	91	61	72,5	107	305	700

* = Uscite standard BSP (Gas), altre uscite disponibili p.30 / Standard inlet-outlet BSP (Gas), different inlet-outlet are available see p.30
** = Raccordi in acciaio inox o nylon a richiesta / Stainless steel or nylon pipe fittings on request

GR ADPE SPECIAL 60 Inox 2"

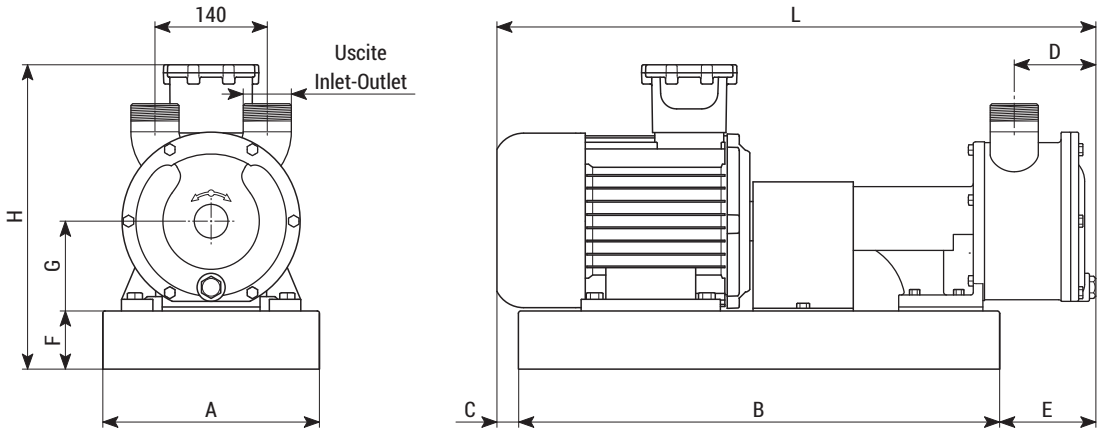

GR ADPE NAUTIC 70 - 70 Inox

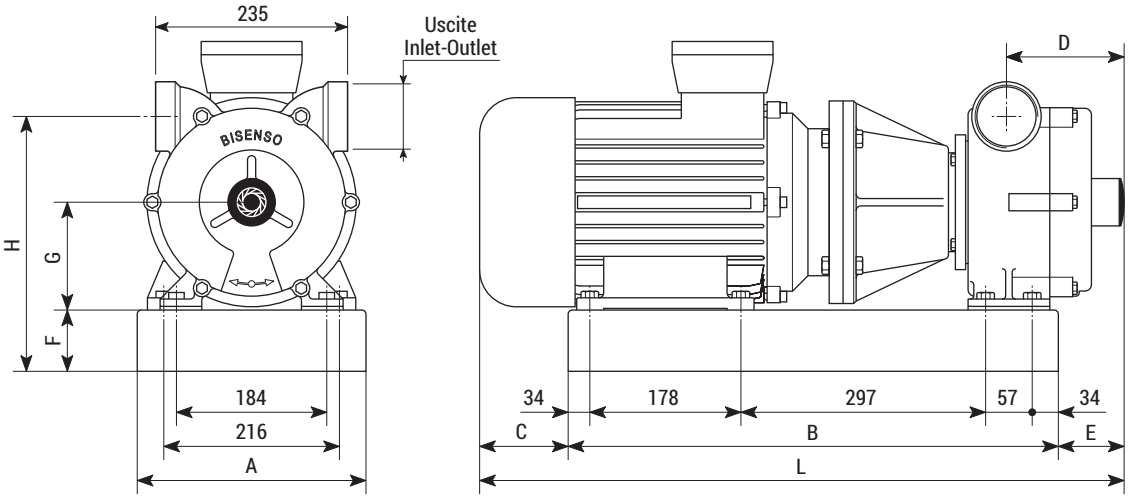

GR ADPE NAUTIC 80 Inox

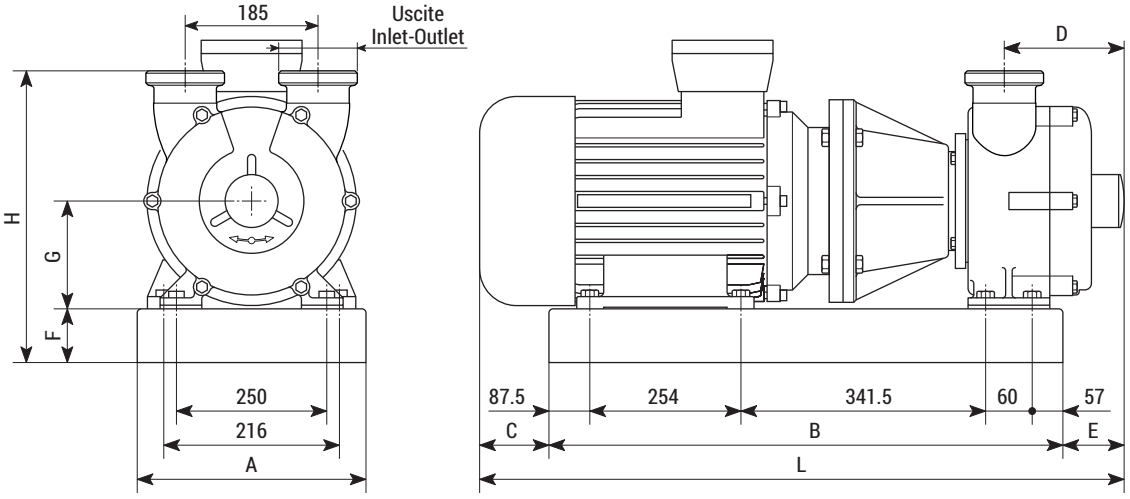

Tipo Type	Peso Weight	Uscite Inlet-Outlet	Raccordi Pipe fittings	Dimensioni (mm) / Dimensions (mm)								
				A	B	C	D	E	F	G	H	L
GR ADPE NAUTIC 70 (5.5 kW)	77.5 kg	BSP-F 2"1/2	n.d.	270	600	100	146	81	72,5	132	310	781,5
GR ADPE NAUTIC 70 (7.5 kW)	91.5 kg	BSP-F 2"1/2	n.d.	270	600	115	146	81	72,5	132	310	796
GR ADPE SPECIAL 60 Inox	54.2 kg	BSP-M 2" *	n.d.	270	600	29	102	112	72,5	112	380	749
GR ADPE NAUTIC 70 Inox (5.5 kW)	77.1 kg	Garolla 70	n.d.	270	600	101	144	81	72,5	132	310	781,5
GR ADPE NAUTIC 70 Inox (7.5 kW)	91.1 kg	Garolla 70	n.d.	270	600	115	144	80	72,5	132	310	795
GR ADPE NAUTIC 80 Inox	175.3 kg	Garolla 80	n.d.	340	800	87	180	86	75	160	420	973

* = Uscite standard BSP (Gas), altre uscite disponibili p.30 / Standard inlet-outlet BSP (Gas), different inlet-outlet are available see p.30
n.d. = Raccordi non disponibili / Pipe fittings not available

RACCORDI ACCIAIO INOX
STAINLESS STEEL PIPE FITTINGS

Tipo Type		NEOS 3/4"	JUNIOR 1"1/4	SENIOR 1"1/2	MASTER 2"	60 Inox	70 Inox	80 Inox
			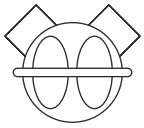		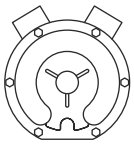	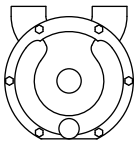	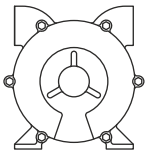	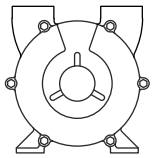
Garolla	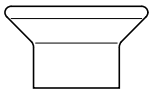	*Non disponibile* *Not available*	Garolla 40	Garolla 40	Garolla 50	Garolla 50 Garolla 60	Garolla 70 Garolla 80	Garolla 80
DIN 11851	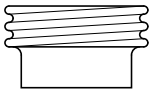	DIN 20 DIN 25	DIN 25 DIN 32 DIN 40	DIN 32 DIN 40 DIN 50	DIN 50	DIN 50 DIN 65	DIN 65 DIN 80	DIN 80
BSP-M	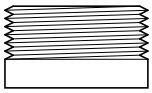	BSP-M 3/4"	BSP-M 1"1/4	BSP-M 1"1/2	BSP-M 2"	BSP-M 2" BSP-M 2"1/2	BSP-M 2"1/2 BSP-M 3"	BSP-M 3"
BSP-F	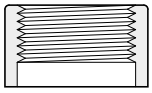	*Non disponibile* *Not available*	BSP-F 1"	BSP-F 1"1/4	BSP-F 1"1/2	BSP-F 2"	BSP-F 2"1/2	BSP-F 3"
Macon	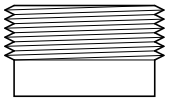	*Non disponibile* *Not available*	Macon 40	Macon 40	Macon 50	Macon 50	Macon 70	Macon 80
Triclover	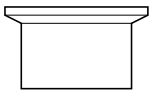	Triclover 1"	Triclover 1"1/2	Triclover 1"1/2	Triclover 2"	Triclover 2" Triclover 2"1/2	Triclover 2"1/2 Triclover 3"	Triclover 3"
SMS	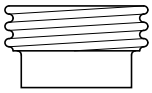	SMS 25	SMS 38	SMS 38	SMS 51	SMS 51 SMS 63	SMS 76	SMS 76
BSM (RJT)	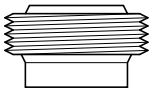	BSM 1"	BSM 1" BSM 1"1/2	BSM 1"1/2	BSM 2"	BSM 2" BSM 2"1/2	BSM 2"1/2 BSM 3"	BSM 3"
Friederich	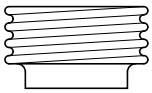	*Non disponibile* *Not available*	Friederich 40	Friederich 40	Friederich 40 Friederich 60	Friederich 60	Friederich 60	*Non disponibile* *Not available*

ACCESSORI
ACCESSORIES

Carrello
Trolley

Maniglia tipo "L"
Handle "L" type

Maniglia tipo "U"
Handle "U" type

Carrelli e maniglie per elettropompe
Trolley and handle for electric pumps

Tipo Type	Codice Code	EP 20	EP 25	EP 30	EP 40	EP 50	EPH/EP NEOS 3/4"	EP JUNIOR 1"1/4	EP SENIOR 1"1/2	EP MASTER 2"
Carrello ferro zincato Zincated iron trolley	36202002		x	x	x	x	x	x	x	x
Carrello inox AISI 304 Stainless steel AISI 304 trolley	36202043		x	x	x	x	x	x	x	x
Maniglia tipo "L" Handle "L" type	34432003	x	x				x	x		
Maniglia tipo "U" Handle "U" type	34432004			x	x				x	

Valvola by-pass
By-pass valve

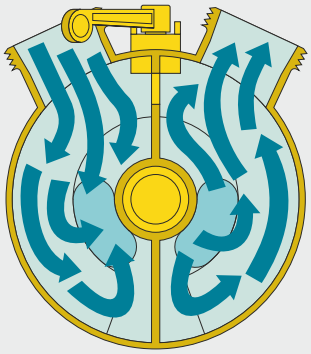

Chiusa/Closed

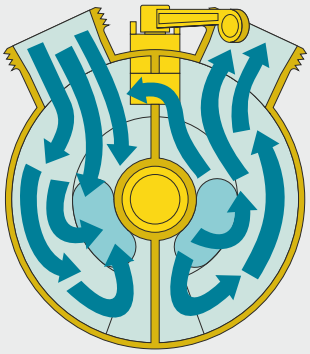

Aperta/Open

Morsettiera
Terminal board connection

Interruttore/invertitore
On-off/reverse switch

Rotativo/Rotative

Basculante/Rocker

COMPONENTI
SPARE PARTS

Pos.	Descrizione/Description	Materiale/Material	20	25	30	40	50	70/70 Inox	NEOS	JUNIOR	SENIOR	MASTER	60 Inox	80 Inox
1	Vite/Screw	Inox AISI 304/Stainless steel AISI 304	×	×	×	×	×	×	×		×	×	×	×
	Cavallotto/U-bolt	Inox AISI 304/Stainless steel AISI 304								×				
1A	Vite/Screw	Inox AISI 304/Stainless steel AISI 304		×	×	×	×	×			×	×	×	×
2	Culatta/Cover	Bronzo/Bronze	×	×	×	×	×	×						
		Inox AISI 316/Stainless steel AISI 316						×	×	×	×	×	×	×
3	Guarnizione culatta/Cover rubber seal	Gomma NBR/Rubber (NBR)	×	×	×	×	×	×	×	×	×	×	×	×
4	Girante/Impeller	Bronzo/Bronze	×	×	×	×	×							
		Inox AISI 316/Stainless steel AISI 316							×	×	×	×	×	
	Girante con albero/Impeller with shaft	Bronzo-Inox/Bronze-Stainless steel		×	×	×	×	×						
		Inox AISI 316/Stainless steel AISI 316						×				×		×
	Girante con albero tipo FM/Impeller with shaft FM type	Bronzo-Inox/Bronze-Stainless steel						×						
		Inox AISI 316/Stainless steel AISI 316						×						
5	Corpo pompa/Casing	Bronzo/Bronze	×	×	×	×	×							
		Inox AISI 316/Stainless steel AISI 316							×	×	×	×	×	
	Corpo pompa con piedi/Casing with feet	Bronzo/Bronze		×	×	×	×	×						
		Inox AISI 316/Stainless steel AISI 316						×				×		×
6	Raccordo dritto con girello/Straight collector with collar	Bronzo/Bronze	×	×	×	×	×	×	×					
7	Raccordo curvo con girello/Bent collector with collar	Bronzo/Bronze	×	×	×	×	×		×					
8	Guarnizione Guarnital-Anello OR/Guarnital gasket-O ring	Guarnital	×	×	×	×	×		×	×	×	×	×	
9	Anello di tenuta paraolio/Lip seal	Gomma NBR/Rubber (NBR)	×	×	×	×	×	×						
		Viton/Viton								×	×	×		
9A	Tenuta meccanica standard/Standard mechanical seal	Ceramica, Inox-Grafite-NBR Ceramics, Stainless steel-Graphite-NBR	×	×	×	×	×	×	×	×	×	×	×	×
	Tenuta meccanica speciale/Special mechanical seal	Vidia-Vidia-Viton/Vidia-Vidia-Viton	×	×	×	×	×	×		×	×	×	×	×
		Vidia-Carburo di Silicio-Viton Vidia-Silicium carbide-Viton	×	×	×	×	×	×	×	×	×	×	×	×
9B	Anello premistoppa/Packing ring	Baderna/Packing			×	×	×							
10	Chiavetta puleggia/Pulley flat key	Inox AISI 304/Stainless steel AISI 304	×	×	×	×	×	×	×		×	×	×	×
11	Guarnizione Melinex/Melinex seal	Melinex/Melinex	×	×	×	×	×							
11A	Guarnizione inox/Stainless steel seal	Inox AISI 316/Stainless steel AISI 316	×	×	×	×	×		×		×	×	×	
12	Cuscinetto/Ball bearing	Commerciale/Commercial	×	×	×	×	×	×	×		×	×	×	×
13	Anello Seeger/Seeger ring	Acciaio/Steel	×	×	×	×	×	×	×		×	×	×	×
14	Puleggia/Pulley	Alluminio/Aluminium	×	×	×	×	×	×	×		×		×	
	Puleggia frizione manuale/Manual clutch pulley	Ghisa/Cast iron			×	×	×	×				×		×
	Frizione magnetica/Magnetic clutch	Commerciale/Commercial			×	×	×	×			×	×	×	×
	Motore idraulico/Hydraulic motor	Commerciale/Commercial				×	×	×				×	×	×
15	Dado/Nut	Acciaio/Steel	×	×	×	×	×	×	×	×	×	×	×	×
16	Supporto SPECIAL/SPECIAL support	Peraluman	×	×	×	×	×		×		×	×	×	×
	Supporto SPECIAL FM/SPECIAL FM support	Peraluman			×	×	×	×			×	×	×	×
	Supporto NAUTIC/NAUTIC support	Bronzo/Bronze		×	×	×	×	×						
	Supporto NAUTIC F/NAUTIC F support	Bronzo/Bronze			×	×	×	×						
	Supporto MID/MID support	Alluminio/Aluminium				×	×	×				×	×	×
17	Anello di compensazione/Spacing ring	Acciaio/Steel	×	×	×	×	×		×		×	×	×	
	Anello antispallamento MID/MID spacing ring	Ottone/Brass				×	×					×		
18	Cuscinetto/Ball bearing	Commerciale/Commercial			×	×	×	×			×	×	×	×

Pos.	Descrizione/Description	Materiale/Material	20	25	30	40	50	70/70 Inox	NEOS	JUNIOR	SENIOR	MASTER	60 Inox	80 Inox
19	Chiavetta girante/Impeller flat key	Inox AISI 304/Stainless steel AISI 304	×	×	×	×	×		×	×	×	×	×	
20	Albero SPECIAL/SPECIAL shaft	Inox AISI 316/Stainless steel AISI 316	×	×	×	×	×		×		×	×	×	
	Albero SPECIAL FM/SPECIAL FM shaft	Inox AISI 316/Stainless steel AISI 316			×	×	×				×	×	×	
	Albero LALX/LALX shaft	16CrNi4Pb				×	×				×	×		
21	Rubinetto di spurgo/Drain cock	Ottone/Brass				×	×							
	Tappo di spurgo/Drain plug	Ottone Nichelato/Nickel-plated brass										×	×	
	Tappo di sfiato/Sniffle plug	Commerciale/Commercial				×	×				×	×		
22	Rondella/Washer	Inox AISI 304/Stainless steel AISI 304	×	×	×	×	×	×	×	×	×	×	×	×
23	Coperchio/Cover	Gomma/Rubber		×	×	×	×	×				×		×
25	Vite/Screw	Acciaio/Steel			×	×	×	×		×	×	×	×	×
26	Maniglia frizione/Clutch handle	Acciaio Zincato/Zincated steel			×	×	×	×						×
	Maniglia LALX/LALX handle	Acciaio Zincato/Zincated steel				×	×				×	×		
27	Settore fisso frizione/Clutch fixed sector	Ottone/Brass			×	×	×	×						×
28	Settore mobile frizione/Clutch mobile sector	Ottone/Brass			×	×	×	×						×
29	Flangia frizione/Clutch flange	Ferro/Iron			×	×	×	×						×
30	Anello distanziale frizione/Clutch spacing ring	Inox AISI 304/Stainless steel AISI 304			×	×	×	×						×
31	Cono frizione/Clutch cone	Ghisa/Cast iron			×	×	×	×						×
32	Cuscinetto/Ball bearing	Commerciale/Commercial			×	×	×	×			×	×		×
33	Anello Seeger/Seeger ring	Acciaio/Steel			×	×	×	×						×
34	Bussola frizione/Clutch bush	Acciaio/Steel			×	×	×	×						×
35	Molla frizione/Clutch spring	Acciaio/Steel			×	×	×	×						×
36	Coperchio frizione/Clutch cover	Alluminio/Aluminium			×	×	×	×						×
37	Culatta posteriore EP JUNIOR/EP JUNIOR rear cover	Inox AISI 316/Stainless steel AISI 316								×				
	Campana pompa EP 70-80 / EP 70-80 pump flange	Ghisa/Cast iron						×						×
38	Anello Seeger/Seeger ring	Acciaio/Steel				×	×					×		
39	Manicotto dentato /Geared coupling	Acciaio C40/Steel C40				×	×					×		
	Manicotto di collegamento/Connecting coupling	Nylon/Nylon						×					×	×
40	Ingranaggio conico/Bevel gear	Acciaio/Steel				×	×					×		
41	Guarnizione Guarnital LALX/LALX guarnital gasket	Guarnital				×	×					×		
42	Dado/Nut	Acciaio/Steel			×	×	×	×			×	×	×	×
43	Giunto coassiale pompa/Pump coaxial coupling	Acciaio/Steel						×					×	×
44	Anello di tenuta paraolio/Lip seal	Gomma NBR/Rubber (NBR)				×	×				×	×		
45	Anello di tenuta paraolio/Lip seal	Gomma NBR/Rubber (NBR)				×	×				×	×		
46	Scatola moltiplicatore LALX/LALX overdrive	Alluminio/Aluminium				×	×				×	×		
47	Anello di tenuta paraolio/Lip seal	Gomma NBR/Rubber (NBR)				×	×				×	×		
48	Indicatore livello olio/Oil level indicator	Commerciale/Commercial				×	×				×	×		
49	Spina conica/Taper pin	Acciaio/Steel				×	×				×	×		
50	Anello antispallamento/Spacing ring	Acciaio/Steel				×	×				×	×		
51	Ingranaggio conduttore LALX/LALX driving gear	16CrNi4				×	×				×	×		
52	Vite/Screw	Acciaio/Steel			×	×	×	×			×	×	×	×
53	Flangia premistoppa/Packing flange	Bronzo/Bronze			×	×	×							
54	Vite prigioniero/Screw	Acciaio/Steel			×	×	×							
55	Giunto coassiale motore/Motor coaxial coupling	Acciaio/Steel						×					×	×
56	Giunto coassiale motore/Motor coaxial coupling	Acciaio/Steel						×						×
57	Giunto coassiale pompa/Pumpa coaxial coupling	Alluminio/Aluminium			×	×	×				×	×		
58	Anello giunto/Coupling ring	Gomma/Rubber			×	×	×				×	×		
59	Giunto coassiale motore/Motor coaxial coupling	Alluminio/Aluminium			×	×	×				×	×		

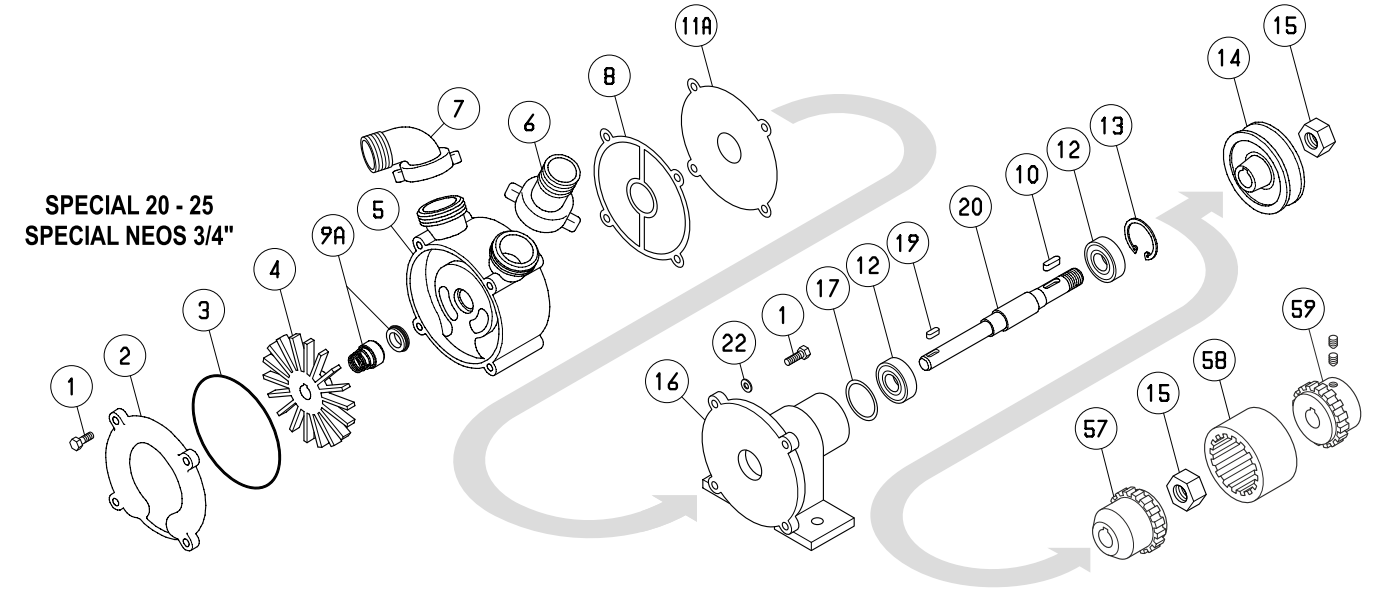
SPECIAL 20 - 25
SPECIAL NEOS 3/4"
Tipo SPECIAL ADPE
SPECIAL ADPE type

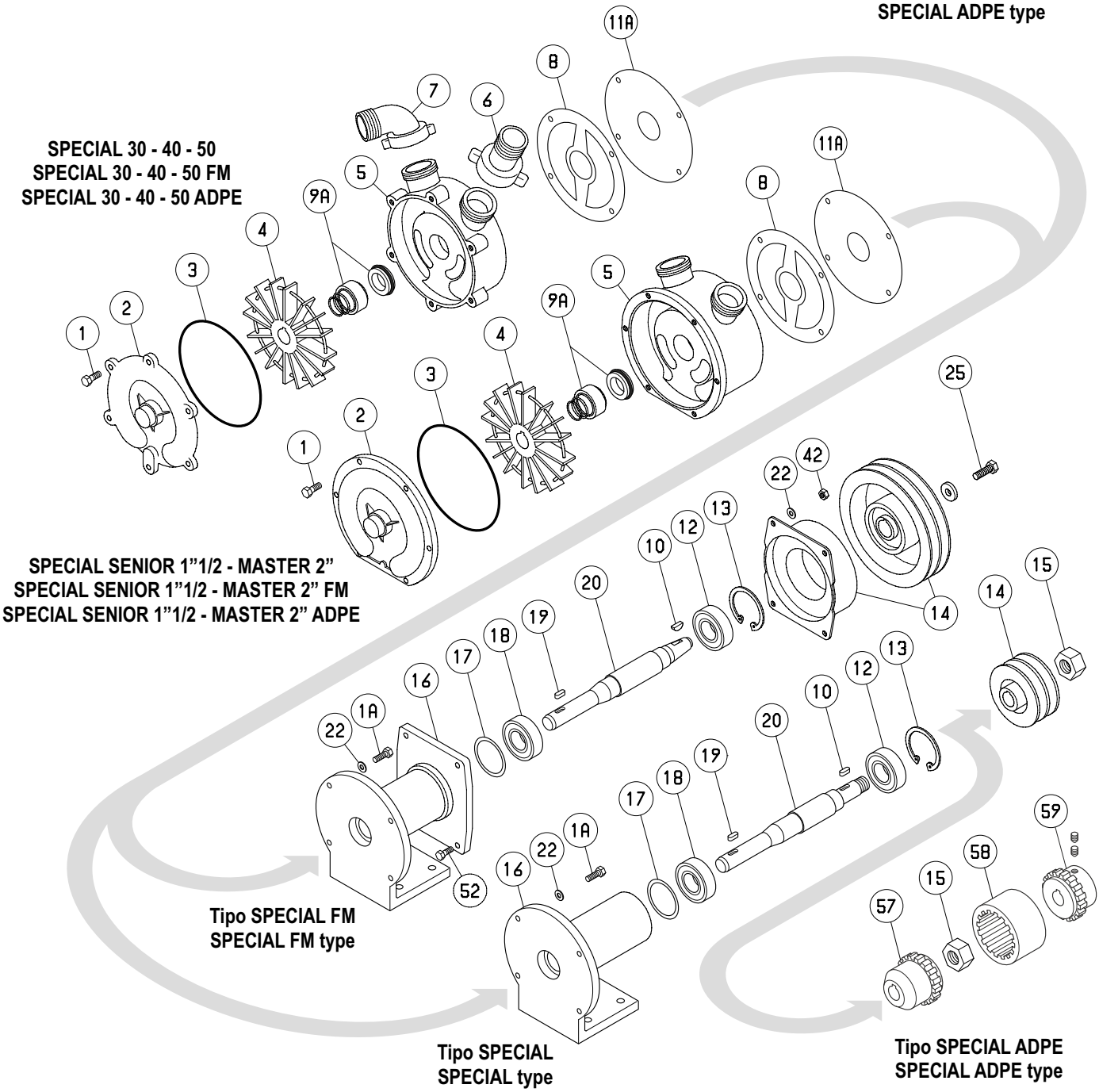
SPECIAL 30 - 40 - 50
SPECIAL 30 - 40 - 50 FM
SPECIAL 30 - 40 - 50 ADPE
SPECIAL SENIOR 1"1/2 - MASTER 2"
SPECIAL SENIOR 1"1/2 - MASTER 2" FM
SPECIAL SENIOR 1"1/2 - MASTER 2" ADPE
Tipo SPECIAL FM
SPECIAL FM type
Tipo SPECIAL
SPECIAL type
Tipo SPECIAL ADPE
SPECIAL ADPE type

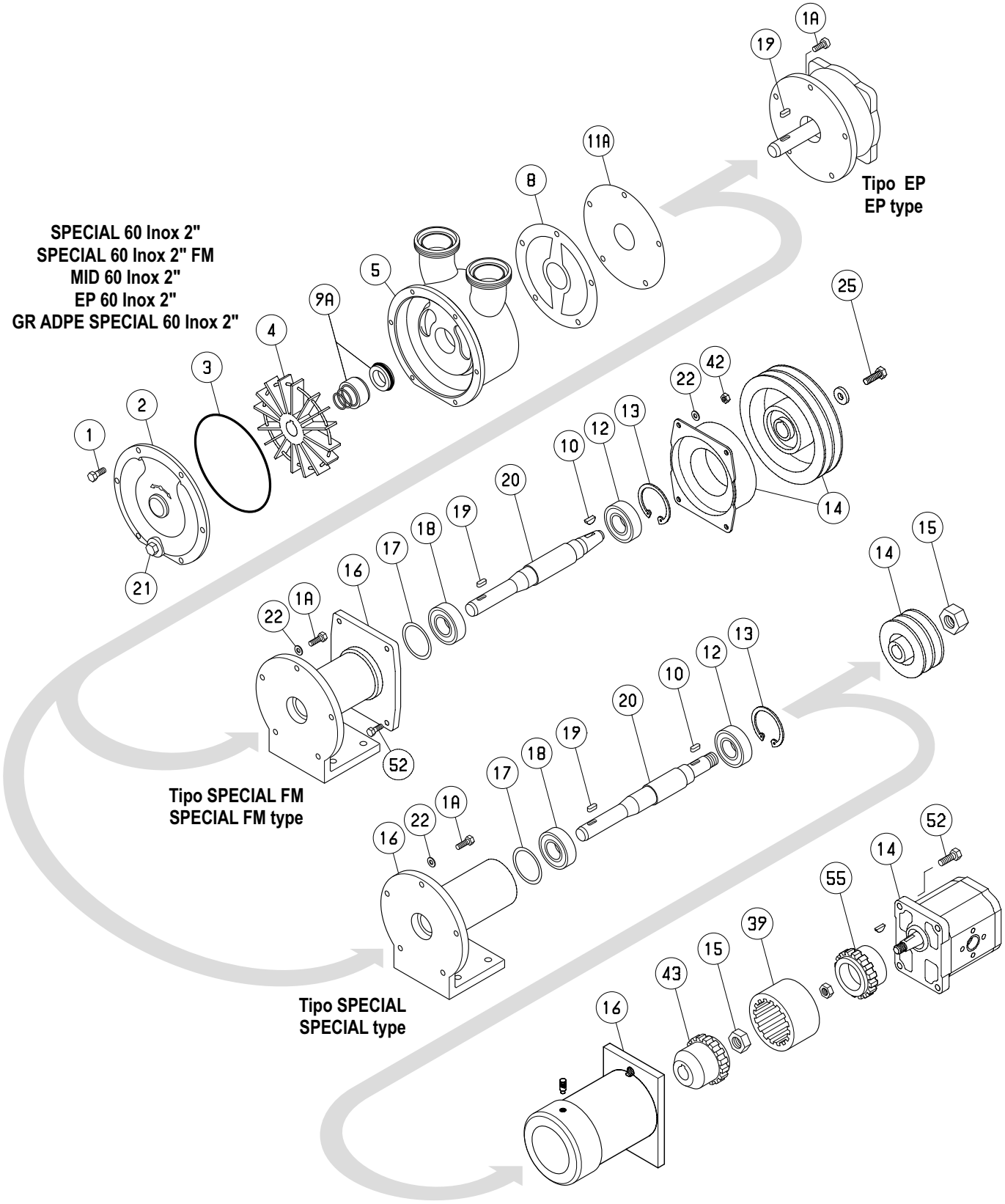
SPECIAL 60 Inox 2"
SPECIAL 60 Inox 2" FM
MID 60 Inox 2"
EP 60 Inox 2"
GR ADPE SPECIAL 60 Inox 2"
Tipo EP
EP type
Tipo SPECIAL FM
SPECIAL FM type
Tipo SPECIAL
SPECIAL type
Tipo MID e SPECIAL ADPE
MID and SPECIAL ADPE type

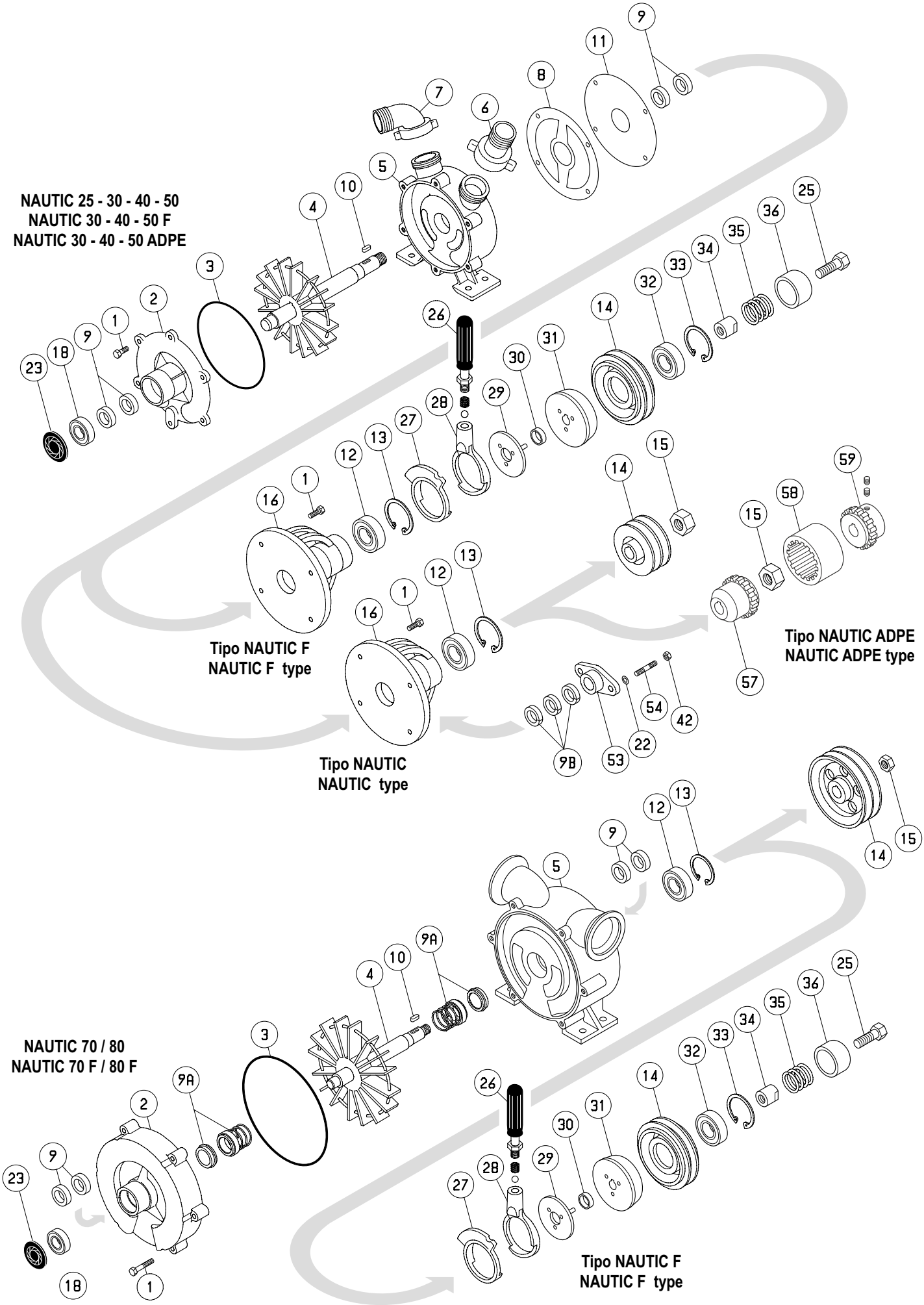
NAUTIC 25 - 30 - 40 - 50
NAUTIC 30 - 40 - 50 F
NAUTIC 30 - 40 - 50 ADPE
Tipo NAUTIC F
NAUTIC F type
Tipo NAUTIC
NAUTIC type
Tipo NAUTIC ADPE
NAUTIC ADPE type
NAUTIC 70 / 80
NAUTIC 70 F / 80 F
Tipo NAUTIC F
NAUTIC F type

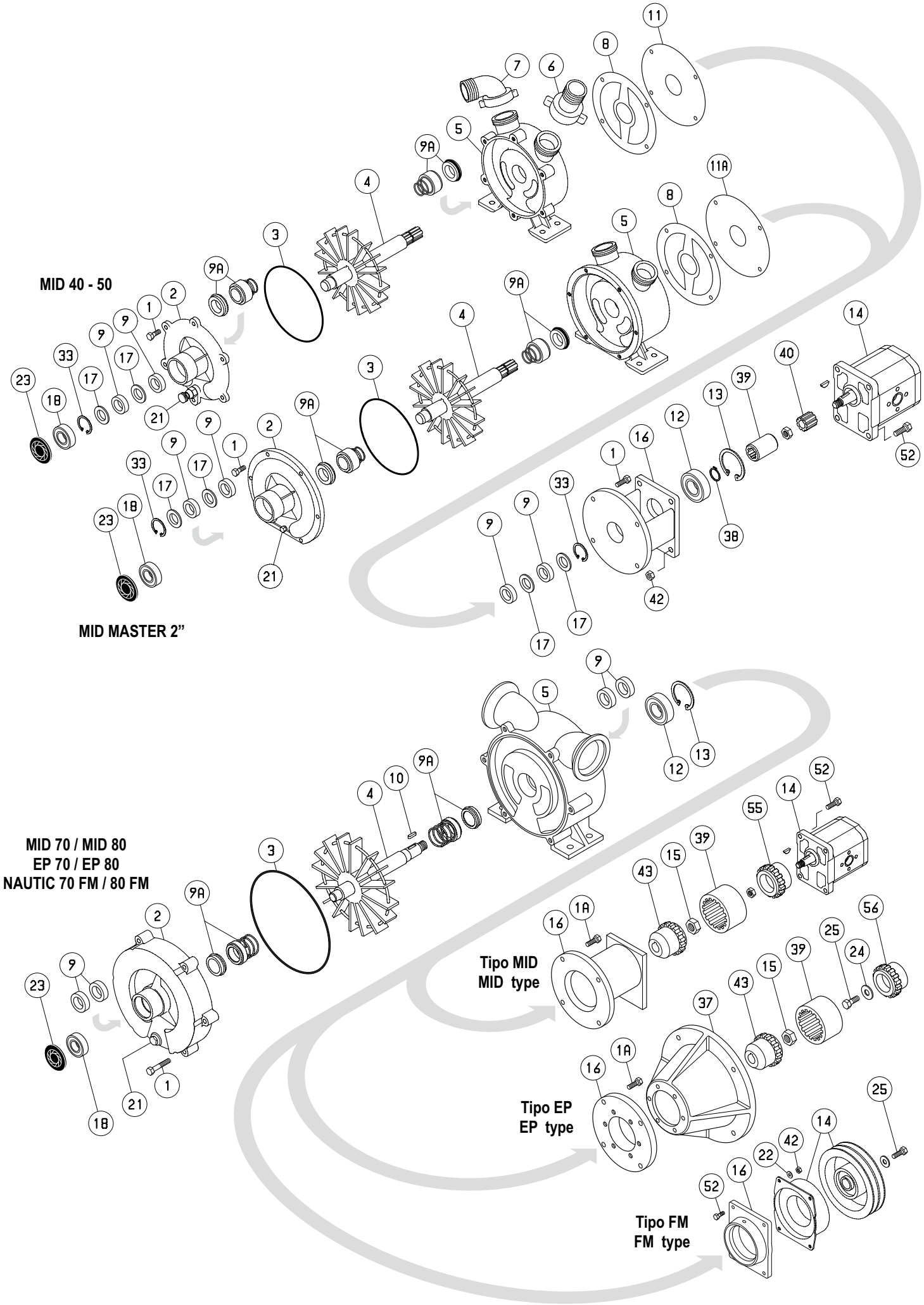
MID 40 - 50
MID MASTER 2”
MID 70 / MID 80
EP 70 / EP 80
NAUTIC 70 FM / 80 FM
Tipo MID
MID type
Tipo EP
EP type
Tipo FM
FM type

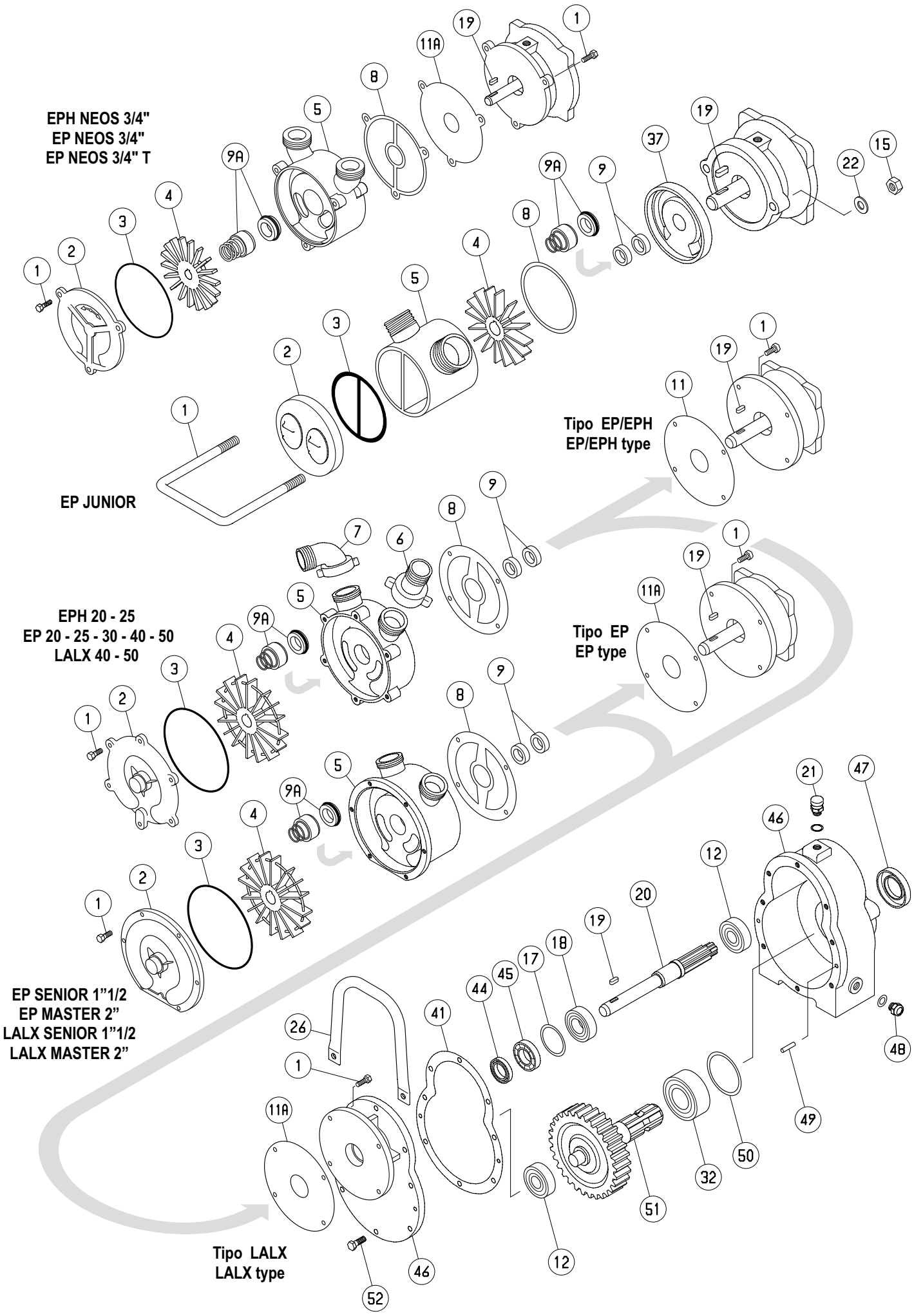
EPH NEOS 3/4"
EP NEOS 3/4"
EP NEOS 3/4" T
EP JUNIOR
Tipo EP/EPH
EP/EPH type
EPH 20 - 25
EP 20 - 25 - 30 - 40 - 50
LALX 40 - 50
Tipo EP
EP type
EP SENIOR 1"1/2
EP MASTER 2"
LALX SENIOR 1"1/2
LALX MASTER 2"
Tipo LALX
LALX type

Principio di funzionamento

La girante stellare, lavorando a rasamento con il corpo e la culatta della pompa, crea una depressione prelevando così il liquido che, dalla camera di aspirazione, tramite la luce di carico, viene trasferito alla luce di scarico e quindi alla camera di mandata.

- Autoadescante, anche in presenza di gas disciolti o in caso di discontinua disponibilità del liquido.
- Reversibile.
- Trasferimento senza pulsazioni.
- Possibilità di funzionamento a secco.

Operating features

The star impeller, grazing the pump head and the frontcover, creates a suction pressure which allows the transferring of the liquid which goes, by the load port, from the inlet chamber to the discharge port and then to the outlet chamber.

- *Selfpriming, also with gas presence and in case of discontinuos flow of liquid.*
- *Reversible.*
- *Transferring without pulsation effect.*
- *Dry operating.*

Funktionsprinzip

Das sternförmige Laufrad, das eng am Pumpenkörper und vorderem Pumpendeckel läuft, erzeugt einen Unterdruck, der den Transport der Flüssigkeit ermöglicht. Diese geht über die Eingangsöffnung vom Eingangsbereich zum Ausgangsbereich und dann zum Pumpenausgang.

- *Selbstansaugend auch bei Anwesenheit von Gas und bei unterbrochener Förderung.*
- *Förderrichtung umkehrbar.*
- *Pulsationsfrei.*
- *Trockenlaufsicher.*

Principe de fonctionnement

Le roteur étoilé, en travaillant à ras avec le corps et la culasse de la pompe, crée une dépression en prélevant ainsi le liquide qui, depuis la chambre d'aspiration, à travers la lumière de charge est transféré à la lumière de décharge et ensuite à la chambre de refoulement.

- *Auto-amorçante, même en présence de gaz dissous ou dans le cas d'une disponibilité irrégulière du liquide.*
- *Réversible.*
- *Transfert sans pulsations.*
- *Possibilité de fonctionnement à vide.*

NAUTIC 25-30-40-50

NAUTIC 70 | NAUTIC 70 Inox

NAUTIC 80 Inox

NAUTIC 30-40-50 F

NAUTIC 70 F | NAUTIC 70 Inox F

NAUTIC 80 Inox F

SPECIAL 20-25-30-40-50

SPECIAL NEOS 3/4"

SPECIAL SENIOR 1"1/2-MASTER 2"

SPECIAL FM 30-40-50

SPECIAL FM SENIOR 1"1/2-MASTER 2"

NAUTIC 70 FM | NAUTIC 70 Inox FM

MID 40-50

MID MASTER 2"

MID 70 | MID 70 Inox

MID 80 Inox

LALX 40-50

LALX SENIOR 1"1/2-MASTER 2"

EP (CC) 20-25-30-40
EP T (CC) 20

EPH (MF)
20-25

EP (MF/TF)
20-25-30-40-50-70

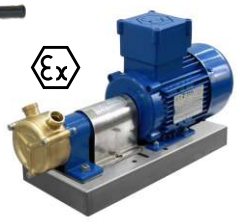

GR ADPE SPECIAL 20-25-30-40-50
GR ADPE NAUTIC 70

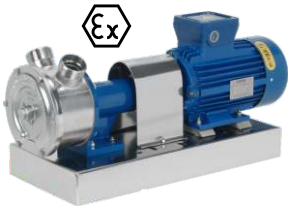

GR ADPE SPECIAL NEOS-SENIOR-MASTER
GR ADPE NAUTIC 70-80 Inox

EPH (MF) NEOS 3/4"
EP (CC/MF/TF) NEOS 3/4"
EP T (CC) NEOS 3/4"

EP JUNIOR 1"1/4

EP SENIOR 1"1/2-MASTER 2"

EP 70 Inox

EP 80 Inox

LIVERANI

FLUID TRANSFER TECHNOLOGY

Via De' Brozzi, 94 - 48022 Lugo (RA) ITALY
Tel. +39 0545 22379 - Fax +39 0545 30350
liverani@liverani.com
www.liverani.com

Distributore
Distributor

Rev. 22/05/2024